PTO/AIA/15 (10-17)
Approved for use through 05/31/2024. OMB 0651-0032
U.S. Patent and Trademark Office; U.S. DEPARTMENT OF COMMERCE
Under the Paperwork Reduction Act of 1995 no persons are required to respond to a collection of information unless it displays a valid OMB control number.

UTILITY PATENT APPLICATION TRANSMITTAL

(Only for new nonprovisional applications under 37 CFR 1.53(b))

Attorney Docket No.	PP6807284
First Named Inventor	SANGHYUN PARK
Title	METHOD FOR PREDICITING COMPOUND-PROTEIN BINDING AFFINITY AND APPA
Priority Mail Express® Label No.	

APPLICATION ELEMENTS

See MPEP chapter 600 concerning utility patent application contents.

1. [✔] **Fee Transmittal Form** (PTO/SB/17 or equivalent)
2. [✔] **Applicant asserts small entity status.** See 37 CFR 1.27
3. [ ] **Applicant certifies micro entity status.** See 37 CFR 1.29. Applicant must attach form PTO/SB/15A or B or equivalent.
4. [✔] **Specification** [*Total Pages* 23] Both the claims and abstract must start on a new page. *(See MPEP § 608.01(a) for information on the preferred arrangement)*
5. [✔] **Drawing(s)** (35 U.S.C. 113) [*Total Sheets* 6]
6. **Inventor's Oath or Declaration** [*Total Pages* 4] *(including substitute statements under 37 CFR 1.64 and assignments serving as an oath or declaration under 37 CFR 1.63(e))*
   a. [✔] Newly executed (original or copy)
   b. [ ] A copy from a prior application (37 CFR 1.63(d))
7. [✔] **Application Data Sheet** ** See note below.* See 37 CFR 1.76 (PTO/AIA/14 or equivalent)
8. **CD-ROM or CD-R** in duplicate, large table, or Computer Program (*Appendix*)
   [ ] Landscape Table on CD
9. **Nucleotide and/or Amino Acid Sequence Submission** (*if applicable, items a. – c. are required*)
   a. [ ] Computer Readable Form (CRF)
   b. [ ] Specification Sequence Listing on:
      i. [ ] CD-ROM or CD-R (2 copies); or
      ii. [ ] Paper
   c. [ ] Statements verifying identity of above copies

ADDRESS TO:

Commissioner for Patents
P.O. Box 1450
Alexandria, VA 22313-1450

ACCOMPANYING APPLICATION PAPERS

10. [ ] **Assignment Papers** (cover sheet & document(s))
    Name of Assignee _____
11. [ ] **37 CFR 3.73(c) Statement** (*when there is an assignee*) [✔] **Power of Attorney**
12. [ ] **English Translation Document** (*if applicable*)
13. [✔] **Information Disclosure Statement** (PTO/SB/08 or PTO-1449)
    [✔] Copies of citations attached
14. [ ] **Preliminary Amendment**
15. [ ] **Return Receipt Postcard** (*MPEP § 503*) (*Should be specifically itemized*)
16. [ ] **Certified Copy of Priority Document(s)** (*if foreign priority is claimed*)
17. [ ] **Nonpublication Request** Under 35 U.S.C. 122(b)(2)(B)(i). Applicant must attach form PTO/SB/35 or equivalent.
18. [✔] **Other:** Request to retrieve electronic priority application; Authorization for internet communication

*Note: (1) Benefit claims under 37 CFR 1.78 and foreign priority claims under 1.55 **must** be included in an Application Data Sheet (ADS).
(2) For applications filed under 35 U.S.C. 111, the application must contain an ADS specifying the applicant if the applicant is an assignee, person to whom the inventor is under an obligation to assign, or person who otherwise shows sufficient proprietary interest in the matter. See 37 CFR 1.46(b).

19. CORRESPONDENCE ADDRESS

[✔] The address associated with Customer Number: 183715 **OR** [ ] Correspondence address below

Name					
Address					
City		State		Zip Code	
Country		Telephone		Email	

Signature	/Byungwoong Park/	Date	2025-12-06
Name (Print/Type)	Byungwoong Park	Registration No. (Attorney/Agent)	80,134

A Federal agency may not conduct or sponsor, and a person is not required to respond to, nor shall a person be subject to a penalty for failure to comply with an information collection subject to the requirements of the Paperwork Reduction Act of 1995, unless the information collection has a currently valid OMB Control Number. The OMB Control Number for this information collection is 0651-0032. Public burden for this form is estimated to average 12 minutes per response, including the time for reviewing instructions, searching existing data sources, gathering and maintaining the data needed, and completing and reviewing the information collection. Send comments regarding this burden estimate or any other aspect of this information collection, including suggestions for reducing this burden to the Chief Administrative Officer, United States Patent and Trademark Office, P.O. Box 1450, Alexandria, VA 22313-1450 or email InformationCollection@uspto.gov. DO NOT SEND FEES OR COMPLETED FORMS TO THIS ADDRESS. **If filing this completed form by mail, send to: Commissioner for Patents, P.O. Box 1450, Alexandria, VA 22313-1450.**

If you need assistance in completing the form, call 1-800-PTO-9199 and select option 2.

Privacy Act Statement

The Privacy Act of 1974 (P.L. 93-579) requires that you be given certain information in connection with your submission of the attached form related to a patent application or patent. The United States Patent and Trademark Office (USPTO) collects the information in this record under authority of 35 U.S.C. 2. The USPTO's system of records is used to manage all applicant and owner information including name, citizenship, residence, post office address, and other information with respect to inventors and their legal representatives pertaining to the applicant's/owner's activities in connection with the invention for which a patent is sought or has been granted. The applicable Privacy Act System of Records Notice for the information collected in this form is COMMERCE/PAT-TM-7 Patent Application Files, available in the Federal Register at 78 FR 19243 (March 29, 2013). https://www.govinfo.gov/content/pkg/FR-2013-03-29/pdf/2013-07341.pdf

Routine uses of the information in this record may include disclosure to: 1) law enforcement, in the event that the system of records indicates a violation or potential violation of law; 2) a Federal, state, local, or international agency, in response to its request; 3) a contractor of the USPTO having need for the information in order to perform a contract; 4) the Department of Justice for determination of whether the Freedom of Information Act (FOIA) requires disclosure of the record; 5) a Member of Congress submitting a request involving an individual to whom the record pertains, when the individual has requested the Member's assistance with respect to the subject matter of the record; 6) a court, magistrate, or administrative tribunal, in the course of presenting evidence, including disclosures to opposing counsel in the course of settlement negotiations; 7) the Administrator, General Services Administration (GSA), or their designee, during an inspection of records conducted by GSA under authority of 44 U.S.C. 2904 and 2906, in accordance with the GSA regulations and any other relevant (i.e., GSA or Commerce) directive, where such disclosure shall not be used to make determinations about individuals; 8) another federal agency for purposes of National Security review (35 U.S.C. 181) and for review pursuant to the Atomic Energy Act (42 U.S.C. 218(c)); 9) the Office of Personnel Management (OPM) for personnel research purposes; and 9) the Office of Management and Budget (OMB) for legislative coordination and clearance.

If you do not furnish the information requested on this form, the USPTO may not be able to process and/or examine your submission, which may result in termination of proceedings, abandonment of the application, and/or expiration of the patent.

Additional Uses

Additional USPTO uses of the information in this record may include disclosure to: 1) the International Bureau of the World Intellectual Property Organization, if the record is related to an international application filed under the Patent Cooperation Treaty; 2) the public i) after publication of the application pursuant to 35 U.S.C. 122(b), ii) after issuance of a patent pursuant to 35 U.S.C. 151, iii) if the record was filed in an application which became abandoned or in which the proceedings were terminated and which application is referenced by either a published application, an application open to public inspections, or an issued patent, or iv) without publication of the application or patent under the specific circumstances provided for by 37 CFR 1.14(a)(1)(v)-(vii); and/or 3) the National Archives and Records Administration, for inspection of records.

PTO/AIA/14 (02-18)
Approved for use through 11/30/2020. OMB 0651-0032
U.S. Patent and Trademark Office; U.S. DEPARTMENT OF COMMERCE
Under the Paperwork Reduction Act of 1995, no persons are required to respond to a collection of information unless it contains a valid OMB control number.

Application Data Sheet 37 CFR 1.76	Attorney Docket Number	PP6807284
	Application Number	
Title of Invention	METHOD FOR PREDICITING COMPOUND-PROTEIN BINDING AFFINITY AND APPARATUS THEREOF	

The application data sheet is part of the provisional or nonprovisional application for which it is being submitted. The following form contains the bibliographic data arranged in a format specified by the United States Patent and Trademark Office as outlined in 37 CFR 1.76.
This document may be completed electronically and submitted to the Office in electronic format using the Electronic Filing System (EFS) or the document may be printed and included in a paper filed application.

Secrecy Order 37 CFR 5.2:

☐ Portions or all of the application associated with this Application Data Sheet may fall under a Secrecy Order pursuant to 37 CFR 5.2 (Paper filers only. Applications that fall under Secrecy Order may not be filed electronically.)

Inventor Information:

Inventor 1 Remove

Legal Name

Prefix	Given Name	Middle Name	Family Name	Suffix
	SANGHYUN		PARK	

Residence Information (Select One) ○ US Residency ◉ Non US Residency ○ Active US Military Service

City	Seoul	Country of Residence[i]	KR

Mailing Address of Inventor:

Address 1	204-3701, 300 Omok-ro, Yangcheon-gu		
Address 2			
City	Seoul	State/Province	
Postal Code	08004	Country[i]	KR

Inventor 2 Remove

Legal Name

Prefix	Given Name	Middle Name	Family Name	Suffix
	SANGMIN		SEO	

Residence Information (Select One) ○ US Residency ◉ Non US Residency ○ Active US Military Service

City	Jeju-si, Jeju-do	Country of Residence[i]	KR

Mailing Address of Inventor:

Address 1	#801, 44 Goma-ro		
Address 2			
City	Jeju-si, Jeju-do	State/Province	
Postal Code	63272	Country[i]	KR

Inventor 3 Remove

Legal Name

PTO/AIA/14 (02-18)
Approved for use through 11/30/2020. OMB 0651-0032
U.S. Patent and Trademark Office; U.S. DEPARTMENT OF COMMERCE
Under the Paperwork Reduction Act of 1995, no persons are required to respond to a collection of information unless it contains a valid OMB control number.

Application Data Sheet 37 CFR 1.76	Attorney Docket Number	PP6807284
	Application Number	
Title of Invention	METHOD FOR PREDICITING COMPOUND-PROTEIN BINDING AFFINITY AND APPARATUS THEREOF	

Prefix	Given Name	Middle Name	Family Name	Suffix
	SEUNGYEON		CHOI	

Residence Information (Select One) ○ US Residency ◉ Non US Residency ○ Active US Military Service

City	Seoul	Country of Residence [i]	KR

Mailing Address of Inventor:

Address 1	101-803, 7-3 Dangsan-ro 45-gil, Yeongdeungpo-gu		
Address 2			
City	Seoul	State/Province	
Postal Code	07213	Country [i]	KR

Inventor 4 Remove

Legal Name

Prefix	Given Name	Middle Name	Family Name	Suffix
	HWANHEE		KIM	

Residence Information (Select One) ○ US Residency ◉ Non US Residency ○ Active US Military Service

City	Seoul	Country of Residence [i]	KR

Mailing Address of Inventor:

Address 1	4F-401, 26 Yonsei-ro 11-gil, Seodaemun-gu		
Address 2			
City	Seoul	State/Province	
Postal Code	03788	Country [i]	KR

Inventor 5 Remove

Legal Name

Prefix	Given Name	Middle Name	Family Name	Suffix
	JIEUN		LEE	

Residence Information (Select One) ○ US Residency ◉ Non US Residency ○ Active US Military Service

City	Seoul	Country of Residence [i]	KR

Mailing Address of Inventor:

Address 1	101-1004, 291 Donggyo-ro, Seodaemun-gu		
Address 2			
City	Seoul	State/Province	
Postal Code	03716	Country [i]	KR

PTO/AIA/14 (02-18)
Approved for use through 11/30/2020. OMB 0651-0032
U.S. Patent and Trademark Office; U.S. DEPARTMENT OF COMMERCE
Under the Paperwork Reduction Act of 1995, no persons are required to respond to a collection of information unless it contains a valid OMB control number.

Application Data Sheet 37 CFR 1.76	Attorney Docket Number	PP6807284
	Application Number	
Title of Invention	METHOD FOR PREDICITING COMPOUND-PROTEIN BINDING AFFINITY AND APPARATUS THEREOF	

All Inventors Must Be Listed - Additional Inventor Information blocks may be generated within this form by selecting the **Add** button. Add

Correspondence Information:

Enter either Customer Number or complete the Correspondence Information section below.
For further information see 37 CFR 1.33(a).

☐ **An Address is being provided for the correspondence Information of this application.**

Customer Number	183715		
Email Address	bwp@zionip.com	Add Email	Remove Email
Email Address	patent_01@zionip.com	Add Email	Remove Email
Email Address	pbwoong@hotmail.com		Remove Email

Application Information:

Title of the Invention	METHOD FOR PREDICITING COMPOUND-PROTEIN BINDING AFFINITY AND APPARATUS THEREOF		
Attorney Docket Number	PP6807284	**Small Entity Status Claimed**	☒
Application Type	Nonprovisional		
Subject Matter	Utility		
Total Number of Drawing Sheets (if any)	6	**Suggested Figure for Publication (if any)**	

Filing By Reference:

Only complete this section when filing an application by reference under 35 U.S.C. 111(c) and 37 CFR 1.57(a). Do not complete this section if application papers including a specification and any drawings are being filed. Any domestic benefit or foreign priority information must be provided in the appropriate section(s) below (i.e., "Domestic Benefit/National Stage Information" and "Foreign Priority Information").

For the purposes of a filing date under 37 CFR 1.53(b), the description and any drawings of the present application are replaced by this reference to the previously filed application, subject to conditions and requirements of 37 CFR 1.57(a).

Application number of the previously filed application	Filing date (YYYY-MM-DD)	Intellectual Property Authority or Country

Publication Information:

☐ Request Early Publication (Fee required at time of Request 37 CFR 1.219)

☐ **Request Not to Publish.** I hereby request that the attached application not be published under 35 U.S.C. 122(b) and certify that the invention disclosed in the attached application **has not and will not** be the subject of an application filed in another country, or under a multilateral international agreement, that requires publication at eighteen months after filing.

Representative Information:

PTO/AIA/14 (02-18)
Approved for use through 11/30/2020. OMB 0651-0032
U.S. Patent and Trademark Office; U.S. DEPARTMENT OF COMMERCE
Under the Paperwork Reduction Act of 1995, no persons are required to respond to a collection of information unless it contains a valid OMB control number.

Application Data Sheet 37 CFR 1.76	Attorney Docket Number	PP6807284
	Application Number	
Title of Invention	METHOD FOR PREDICITING COMPOUND-PROTEIN BINDING AFFINITY AND APPARATUS THEREOF	

Representative information should be provided for all practitioners having a power of attorney in the application. Providing this information in the Application Data Sheet does not constitute a power of attorney in the application (see 37 CFR 1.32).
Either enter Customer Number or complete the Representative Name section below. If both sections are completed the customer Number will be used for the Representative Information during processing.

Please Select One:	(●) Customer Number	( ) US Patent Practitioner	( ) Limited Recognition (37 CFR 11.9)
Customer Number	183715		

Domestic Benefit/National Stage Information:

This section allows for the applicant to either claim benefit under 35 U.S.C. 119(e), 120, 121, 365(c), or 386(c) or indicate National Stage entry from a PCT application. Providing benefit claim information in the Application Data Sheet constitutes the specific reference required by 35 U.S.C. 119(e) or 120, and 37 CFR 1.78.
When referring to the current application, please leave the "Application Number" field blank.

Prior Application Status			Remove
Application Number	Continuity Type	Prior Application Number	Filing or 371(c) Date (YYYY-MM-DD)

Additional Domestic Benefit/National Stage Data may be generated within this form by selecting the **Add** button.

Foreign Priority Information:

This section allows for the applicant to claim priority to a foreign application. Providing this information in the application data sheet constitutes the claim for priority as required by 35 U.S.C. 119(b) and 37 CFR 1.55. When priority is claimed to a foreign application that is eligible for retrieval under the priority document exchange program (PDX) the[i] information will be used by the Office to automatically attempt retrieval pursuant to 37 CFR 1.55(i)(1) and (2). Under the PDX program, applicant bears the ultimate responsibility for ensuring that a copy of the foreign application is received by the Office from the participating foreign intellectual property office, or a certified copy of the foreign priority application is filed, within the time period specified in 37 CFR 1.55(g)(1).

			Remove
Application Number	Country[j]	Filing Date (YYYY-MM-DD)	Access Code[i] (if applicable)
10-2024-0180165	KR	2024-12-06	50E4

Additional Foreign Priority Data may be generated within this form by selecting the **Add** button.

Statement under 37 CFR 1.55 or 1.78 for AIA (First Inventor to File) Transition Applications

PTO/AIA/14 (02-18)
Approved for use through 11/30/2020. OMB 0651-0032
U.S. Patent and Trademark Office; U.S. DEPARTMENT OF COMMERCE
Under the Paperwork Reduction Act of 1995, no persons are required to respond to a collection of information unless it contains a valid OMB control number.

Application Data Sheet 37 CFR 1.76	Attorney Docket Number	PP6807284
	Application Number	
Title of Invention	METHOD FOR PREDICITING COMPOUND-PROTEIN BINDING AFFINITY AND APPARATUS THEREOF	

☐ This application (1) claims priority to or the benefit of an application filed before March 16, 2013 and (2) also contains, or contained at any time, a claim to a claimed invention that has an effective filing date on or after March 16, 2013.
NOTE: By providing this statement under 37 CFR 1.55 or 1.78, this application, with a filing date on or after March 16, 2013, will be examined under the first inventor to file provisions of the AIA.

PTO/AIA/14 (02-18)
Approved for use through 11/30/2020. OMB 0651-0032
U.S. Patent and Trademark Office; U.S. DEPARTMENT OF COMMERCE
Under the Paperwork Reduction Act of 1995, no persons are required to respond to a collection of information unless it contains a valid OMB control number.

Application Data Sheet 37 CFR 1.76	Attorney Docket Number	PP6807284
	Application Number	
Title of Invention	METHOD FOR PREDICITING COMPOUND-PROTEIN BINDING AFFINITY AND APPARATUS THEREOF	

Authorization or Opt-Out of Authorization to Permit Access:

When this Application Data Sheet is properly signed and filed with the application, applicant has provided written authority to permit a participating foreign intellectual property (IP) office access to the instant application-as-filed (see paragraph A in subsection 1 below) and the European Patent Office (EPO) access to any search results from the instant application (see paragraph B in subsection 1 below).

Should applicant choose not to provide an authorization identified in subsection 1 below, applicant **must opt-out** of the authorization by checking the corresponding box A or B or both in subsection 2 below.

NOTE: This section of the Application Data Sheet is **ONLY** reviewed and processed with the **INITIAL** filing of an application. After the initial filing of an application, an Application Data Sheet cannot be used to provide or rescind authorization for access by a foreign IP office(s). Instead, Form PTO/SB/39 or PTO/SB/69 must be used as appropriate.

1. Authorization to Permit Access by a Foreign Intellectual Property Office(s)

A. Priority Document Exchange (PDX) - Unless box A in subsection 2 (opt-out of authorization) is checked, the undersigned hereby **grants the USPTO authority** to provide the European Patent Office (EPO), the Japan Patent Office (JPO), the Korean Intellectual Property Office (KIPO), the State Intellectual Property Office of the People's Republic of China (SIPO), the World Intellectual Property Organization (WIPO), and any other foreign intellectual property office participating with the USPTO in a bilateral or multilateral priority document exchange agreement in which a foreign application claiming priority to the instant patent application is filed, access to: (1) the instant patent application-as-filed and its related bibliographic data, (2) any foreign or domestic application to which priority or benefit is claimed by the instant application and its related bibliographic data, and (3) the date of filing of this Authorization. See 37 CFR 1.14(h)(1).

B. Search Results from U.S. Application to EPO - Unless box B in subsection 2 (opt-out of authorization) is checked, the undersigned hereby **grants the USPTO authority** to provide the EPO access to the bibliographic data and search results from the instant patent application when a European patent application claiming priority to the instant patent application is filed. See 37 CFR 1.14(h)(2).

The applicant is reminded that the EPO's Rule 141(1) EPC (European Patent Convention) requires applicants to submit a copy of search results from the instant application without delay in a European patent application that claims priority to the instant application.

2. Opt-Out of Authorizations to Permit Access by a Foreign Intellectual Property Office(s)

☐ A. Applicant **DOES NOT** authorize the USPTO to permit a participating foreign IP office access to the instant application-as-filed. If this box is checked, the USPTO will not be providing a participating foreign IP office with any documents and information identified in subsection 1A above.

☐ B. Applicant **DOES NOT** authorize the USPTO to transmit to the EPO any search results from the instant patent application. If this box is checked, the USPTO will not be providing the EPO with search results from the instant application.

NOTE: Once the application has published or is otherwise publicly available, the USPTO may provide access to the application in accordance with 37 CFR 1.14.

PTO/AIA/14 (02-18)
Approved for use through 11/30/2020. OMB 0651-0032
U.S. Patent and Trademark Office; U.S. DEPARTMENT OF COMMERCE
Under the Paperwork Reduction Act of 1995, no persons are required to respond to a collection of information unless it contains a valid OMB control number.

Application Data Sheet 37 CFR 1.76	Attorney Docket Number	PP6807284
	Application Number	
Title of Invention	METHOD FOR PREDICITING COMPOUND-PROTEIN BINDING AFFINITY AND APPARATUS THEREOF	

Applicant Information:

Providing assignment information in this section does not substitute for compliance with any requirement of part 3 of Title 37 of CFR to have an assignment recorded by the Office.

Applicant 1

If the applicant is the inventor (or the remaining joint inventor or inventors under 37 CFR 1.45), this section should not be completed. The information to be provided in this section is the name and address of the legal representative who is the applicant under 37 CFR 1.43; or the name and address of the assignee, person to whom the inventor is under an obligation to assign the invention, or person who otherwise shows sufficient proprietary interest in the matter who is the applicant under 37 CFR 1.46. If the applicant is an applicant under 37 CFR 1.46 (assignee, person to whom the inventor is obligated to assign, or person who otherwise shows sufficient proprietary interest) together with one or more joint inventors, then the joint inventor or inventors who are also the applicant should be identified in this section.

Clear

(●) Assignee	( ) Legal Representative under 35 U.S.C. 117	( ) Joint Inventor
( ) Person to whom the inventor is obligated to assign.	( ) Person who shows sufficient proprietary interest	

If applicant is the legal representative, indicate the authority to file the patent application, the inventor is:

Name of the Deceased or Legally Incapacitated Inventor:

If the Applicant is an Organization check here. [X]

Organization Name	UIF (University Industry Foundation), Yonsei University

Mailing Address Information For Applicant:

Address 1	50 Yonsei-ro, Seodaemun-gu		
Address 2			
City	Seoul	**State/Province**	
Country	KR	Postal Code	03722
Phone Number		Fax Number	
Email Address			

Additional Applicant Data may be generated within this form by selecting the Add button.

Assignee Information including Non-Applicant Assignee Information:

Providing assignment information in this section does not substitute for compliance with any requirement of part 3 of Title 37 of CFR to have an assignment recorded by the Office.

PTO/AIA/14 (02-18)
Approved for use through 11/30/2020. OMB 0651-0032
U.S. Patent and Trademark Office; U.S. DEPARTMENT OF COMMERCE
Under the Paperwork Reduction Act of 1995, no persons are required to respond to a collection of information unless it contains a valid OMB control number.

Application Data Sheet 37 CFR 1.76	Attorney Docket Number	PP6807284
	Application Number	
Title of Invention	METHOD FOR PREDICITING COMPOUND-PROTEIN BINDING AFFINITY AND APPARATUS THEREOF	

Assignee 1

Complete this section if assignee information, including non-applicant assignee information, is desired to be included on the patent application publication. An assignee-applicant identified in the "Applicant Information" section will appear on the patent application publication as an applicant. For an assignee-applicant, complete this section only if identification as an assignee is also desired on the patent application publication.

If the Assignee or Non-Applicant Assignee is an Organization check here. ☐

Prefix	**Given Name**	Middle Name	**Family Name**	Suffix

Mailing Address Information For Assignee including Non-Applicant Assignee:

Address 1			
Address 2			
City		**State/Province**	
Country[i]		Postal Code	
Phone Number		Fax Number	
Email Address			

Additional Assignee or Non-Applicant Assignee Data may be generated within this form by selecting the Add button.

Signature:

NOTE: This Application Data Sheet must be signed in accordance with 37 CFR 1.33(b). **However, if this Application Data Sheet is submitted with the INITIAL filing of the application and either box A or B is not checked in subsection 2 of the "Authorization or Opt-Out of Authorization to Permit Access" section, then this form must also be signed in accordance with 37 CFR 1.14(c).**

This Application Data Sheet **must** be signed by a patent practitioner if one or more of the applicants is a **juristic entity** (e.g., corporation or association). If the applicant is two or more joint inventors, this form must be signed by a patent practitioner, **all** joint inventors who are the applicant, or one or more joint inventor-applicants who have been given power of attorney (e.g., see USPTO Form PTO/AIA/81) on behalf of **all** joint inventor-applicants.

See 37 CFR 1.4(d) for the manner of making signatures and certifications.

Signature	/Byungwoong Park/			Date (YYYY-MM-DD)	2025-12-06
First Name	Byungwoong	Last Name	Park	Registration Number	80,134

Additional Signature may be generated within this form by selecting the Add button.

PTO/AIA/14 (02-18)
Approved for use through 11/30/2020. OMB 0651-0032
U.S. Patent and Trademark Office; U.S. DEPARTMENT OF COMMERCE
Under the Paperwork Reduction Act of 1995, no persons are required to respond to a collection of information unless it contains a valid OMB control number.

Application Data Sheet 37 CFR 1.76	Attorney Docket Number	PP6807284
	Application Number	
Title of Invention	METHOD FOR PREDICITING COMPOUND-PROTEIN BINDING AFFINITY AND APPARATUS THEREOF	

This collection of information is required by 37 CFR 1.76. The information is required to obtain or retain a benefit by the public which is to file (and by the USPTO to process) an application. Confidentiality is governed by 35 U.S.C. 122 and 37 CFR 1.14. This collection is estimated to take 23 minutes to complete, including gathering, preparing, and submitting the completed application data sheet form to the USPTO. Time will vary depending upon the individual case. Any comments on the amount of time you require to complete this form and/or suggestions for reducing this burden, should be sent to the Chief Information Officer, U.S. Patent and Trademark Office, U.S. Department of Commerce, P.O. Box 1450, Alexandria, VA 22313-1450. DO NOT SEND FEES OR COMPLETED FORMS TO THIS ADDRESS. **SEND TO: Commissioner for Patents, P.O. Box 1450, Alexandria, VA 22313-1450.**

Privacy Act Statement

The Privacy Act of 1974 (P.L. 93-579) requires that you be given certain information in connection with your submission of the attached form related to a patent application or patent. Accordingly, pursuant to the requirements of the Act, please be advised that: (1) the general authority for the collection of this information is 35 U.S.C. 2(b)(2); (2) furnishing of the information solicited is voluntary; and (3) the principal purpose for which the information is used by the U.S. Patent and Trademark Office is to process and/or examine your submission related to a patent application or patent. If you do not furnish the requested information, the U.S. Patent and Trademark Office may not be able to process and/or examine your submission, which may result in termination of proceedings or abandonment of the application or expiration of the patent.

The information provided by you in this form will be subject to the following routine uses:

1 The information on this form will be treated confidentially to the extent allowed under the Freedom of Information Act (5 U.S.C. 552) and the Privacy Act (5 U.S.C. 552a). Records from this system of records may be disclosed to the Department of Justice to determine whether the Freedom of Information Act requires disclosure of these records.

2. A record from this system of records may be disclosed, as a routine use, in the course of presenting evidence to a court, magistrate, or administrative tribunal, including disclosures to opposing counsel in the course of settlement negotiations.

3 A record in this system of records may be disclosed, as a routine use, to a Member of Congress submitting a request involving an individual, to whom the record pertains, when the individual has requested assistance from the Member with respect to the subject matter of the record.

4. A record in this system of records may be disclosed, as a routine use, to a contractor of the Agency having need for the information in order to perform a contract. Recipients of information shall be required to comply with the requirements of the Privacy Act of 1974, as amended, pursuant to 5 U.S.C. 552a(m).

5. A record related to an International Application filed under the Patent Cooperation Treaty in this system of records may be disclosed, as a routine use, to the International Bureau of the World Intellectual Property Organization, pursuant to the Patent CooperationTreaty.

6. A record in this system of records may be disclosed, as a routine use, to another federal agency for purposes of National Security review (35 U.S.C. 181) and for review pursuant to the Atomic Energy Act (42 U.S.C. 218(c)).

7. A record from this system of records may be disclosed, as a routine use, to the Administrator, General Services, or his/her designee, during an inspection of records conducted by GSA as part of that agency's responsibility to recommend improvements in records management practices and programs, under authority of 44 U.S.C. 2904 and 2906. Such disclosure shall be made in accordance with the GSA regulations governing inspection of records for this purpose, and any other relevant (i.e., GSA or Commerce) directive. Such disclosure shall not be used to make determinations about individuals.

8. A record from this system of records may be disclosed, as a routine use, to the public after either publication of the application pursuant to 35 U.S.C. 122(b) or issuance of a patent pursuant to 35 U.S.C. 151. Further, a record may be disclosed, subject to the limitations of 37 CFR 1.14, as a routine use, to the public if the record was filed in an application which became abandoned or in which the proceedings were terminated and which application is referenced by either a published application, an application open to public inspections or an issued patent.

9. A record from this system of records may be disclosed, as a routine use, to a Federal, State, or local law enforcement agency, if the USPTO becomes aware of a violation or potential violation of law or regulation.

METHOD FOR PREDICITING COMPOUND-PROTEIN BINDING AFFINITY AND APPARATUS THEREOF

CROSS-REFERENCE TO RELATED APPLICATIONS

[0001] A claim for priority under 35 U.S.C. § 119 is made to Korean Patent Application No. 10-2024-0180165 filed on November 06, 2024, in the Korean Intellectual Property Office, the entire contents of which are hereby incorporated by reference.

BACKGROUND

[0002] Embodiments of the inventive concept described herein relate to a method for predicting compound-protein binding affinity, and an apparatus thereof, and more particularly, relate to a compound-protein binding affinity prediction method that accurately and effectively predicts compound-protein binding affinity based on compound-protein complex free.

[0003] High-throughput screening is used in the early stages of drug development, but it is impossible to evaluate all compound-protein interactions. To compensate for this, protein structure-based virtual screening is employed. For example, molecular docking is widely utilized. However, it has limitations in requiring significant computational resources and having restricted accuracy.

[0004] Moreover, the scarcity of experimentally obtained 3D compound-protein complex structures has limited training datasets, thereby hindering development.

[0005] Accordingly, inventors of the inventive concept endeavored to predict compound-protein binding affinity independently of compound-protein complex structures, thereby culminating in the completion of the inventive concept.

SUMMARY

[0006] Embodiments of the inventive concept provide a compound-protein binding affinity prediction method that accurately and effectively predicts compound-protein binding affinity based on compound-protein complex free.

[0007] Problems to be solved by the inventive concept are not limited to the problems mentioned above, and other problems not mentioned will be clearly understood by those skilled in the art from the following description.

[0008] According to an exemplary embodiment, a compound-protein binding affinity prediction method performed by at least one processor includes receiving compound data and protein data, which interact with each other, generating an attribute vector of a compound and an attribute vector of a protein based on the input compound data and the input protein data, calculating an attention value based on the attribute vector of the compound and the attribute vector of the protein, generating a first interaction matrix based on the attention value, learning a first AI model to predict a binding affinity and a non-covalent interaction of compound-protein by using the first interaction matrix as learning data, and predicting the binding affinity and the non-covalent interaction of the compound-protein based on an output value of the first AI model.

[0009] According to an embodiment of the inventive concept, the receiving of the compound data includes generating a compound structure graph. The compound structure graph has an attribute of an atom as a node and has an attribute of a bond as an edge.

[0010] According to an embodiment of the inventive concept, the calculating of the attention value based on the attribute vector of the compound and the attribute vector of the protein includes calculating a key, a value, and a query based on the attribute vector of the compound and the attribute vector of the protein, and crossing the calculated query of the compound and the calculated query of the protein, or crossing a key and a value of the compound and a key and a value of the protein to provide the crossed result to a sub-attention layer.

[0011] According to an embodiment of the inventive concept, the calculating of the attention value based on the attribute vector of the compound and the attribute vector of the protein further includes providing an output value of the sub-attention layer to a self-attention layer, and providing an output value of the self-attention layer to a feed-forward layer.

[0012] According to an embodiment of the inventive concept, the learning of the first AI model includes calculating an interaction score between one or more elements of the compound and one or more residues of the protein, extracting a latent variable from the score, and providing the latent variable to a fully connected layer.

[0013] According to an embodiment of the inventive concept, the output value of the first AI model includes the attribute vector of the compound, the attribute vector of

the protein, the first interaction matrix, and the binding affinity predicted by the first AI model.

[0014] According to an embodiment of the inventive concept, the predicting of the binding affinity and the non-covalent interaction of the compound-protein based on the output value of the first AI model includes performing knowledge distillation by inputting the output value of the first AI model into a second AI model, and predicting the non-covalent interaction and the binding affinity in the second AI model. Data received by the first AI model is based on a compound-protein complex.

[0015] According to an embodiment of the inventive concept, the performing of the knowledge distillation includes calculating a loss function by comparing the first interaction matrix with a second interaction matrix generated by the second AI model.

[0016] According to an embodiment of the inventive concept, a computer program stored in a computer-readable recording medium is provided to execute the above-described method on a computer.

[0017] According to an exemplary embodiment, a computing apparatus includes a communication module, a memory, and at least one processor connected to the memory and configured to execute at least one computer-readable program included in the memory. The at least one program includes instructions for receiving a structure of a compound and a structure of a protein, which interact with each other, generating an attribute vector of a compound and an attribute vector of a protein based on the input structure of the compound and the input structure of the protein, calculating an attention value based on the attribute vector of the compound and the attribute vector of the protein, generating a first interaction matrix based on the attention value, learning a first AI model to predict a binding affinity and a non-covalent interaction of compound-protein by using the first interaction matrix as learning data, and predicting the binding affinity and the non-covalent interaction of the compound-protein based on an output value of the first AI model.

BRIEF DESCRIPTION OF THE FIGURES

[0018] The above and other objects and features will become apparent from the following description with reference to the following figures, wherein like reference numerals refer to like parts throughout the various figures unless otherwise specified,

and wherein:

[0019] FIG. 1 is a functional block diagram illustrating an internal configuration of a computing apparatus, according to an embodiment;

[0020] FIG. 2 is a functional block diagram showing an internal configuration of an AI model, according to an embodiment;

[0021] FIG. 3 is a flowchart of a compound-protein binding affinity prediction method, according to an embodiment;

[0022] FIG. 4 is a diagram illustrating an operation of calculating an attention value by using a layer, according to an embodiment;

[0023] FIG. 5 is a graph for comparing the performance of models predicting a binding affinity of compound-protein, according to an embodiment; and

[0024] FIG. 6 is a block diagram showing a hardware configuration of a computing apparatus, according to an embodiment.

DETAILED DESCRIPTION

[0025] Hereinafter, embodiments of the inventive concept will be described in detail with reference to the accompanying drawings. However, the inventive concept is not intended to be limited or restricted by embodiments. Unless otherwise defined, all terms (including technical and scientific terms) used in the specification should have the same meaning as commonly understood by those skilled in the art to which the inventive concept pertains, but which may vary according to the intent or precedent of those practicing in the art, the emergence of new technology, and the like.

[0026] Moreover, terms, such as those defined in commonly used dictionaries, should not be interpreted in an idealized or overly formal sense unless expressly so defined herein. Terms arbitrarily selected by the applicant of embodiments may also be used in a specific case. In this case, the detailed meanings are given in the corresponding description. Hence, these terms used in the inventive concept may be defined based on their meanings and the contents of the inventive concept, not by simply stating the terms.

[0027] It will be understood that the terms “comprises,” “comprising,” “includes” and/or “including,” when used herein, specify the presence of stated elements and/or components, but do not preclude the presence or addition of one or more other elements and/or components. Moreover, as used in the specification, the singular

terms “a,” “an” and “the” are intended to include the plural forms as well, unless the context clearly indicates otherwise. Besides, the expression “at least one of a, b, and/or c” described throughout this specification may encompass ‘a alone’, ‘b alone’, ‘c alone’, ‘a and b’, ‘a and c’, ‘b and c’, or ‘all of a, b, and c’.

[0028] In the meantime, the term “first and/or second” used in the specification will be used to describe various elements but will be described only for the purpose of distinguishing one element from another element, not limiting an element of the corresponding term. For example, without departing the scope of the inventive concept, a first element may be referred to as a second element, and similarly, a second element may be referred to as a first element.

[0029] In addition, terms such as “…unit”, “…module”, etc. described in this specification mean a unit that processes at least one function or operation, which may be implemented as hardware or software, or a combination of hardware and software. Furthermore, an embodiment of the inventive concept described herein may be represented by functional block configurations and various processing steps. These functional blocks may be implemented in the variable number of hardware or/and software configurations that perform specific functions. For example, embodiments of the inventive concept may employ integrated circuit configurations such as a memory, processing, logic, a look-up table, etc., which may execute various functions under the control of one or more microprocessors or other control devices.

[0030] In an embodiment of the inventive concept, functions related to artificial intelligence may be implemented through a processor and a memory. In this case, the processor may be one of a general-purpose processor such as a center processing unit (CPU), an application processor (AP), a digital signal processor (DSP), a graphics-dedicated processor such as a graphic processing unit (GPU), a vision processing unit (VPU), and an AI-dedicated processor such as a neural network processing unit (NPU). The processor may process input data depending on an AI model or a predefined operating rule, which is stored in the memory. Alternatively, when the processor is an AI-dedicated processor, the AI-dedicated processor may be designed with a hardware structure specialized for the processing of a specific AI model. In some embodiments of the inventive concept, functions related to artificial intelligence may be implemented through a plurality of processors.

[0031] In an embodiment of the inventive concept, the predefined operating rule or

the artificial intelligence model may be configured to perform machine learning. Here, being configured to perform machine learning means that the predefined operation rule or the artificial intelligence model is configured to perform a desired feature (or purpose) by learning pieces of learning data based on a learning algorithm. This learning may be performed by a device itself, on which the artificial intelligence according to an embodiment of the inventive concept is implemented, or may be performed through a separate server and/or system.

[0032] The artificial intelligence model may be implemented with a neural network (or an artificial neural network) and may operate based on a statistical learning algorithm that mimics biological neurons in machine learning and cognitive science. The neural network may refer to a model as a whole having the ability to solve problems as artificial neurons (nodes), which form a network by connecting synapses, changes the strength of their synaptic connections through learning. The neural network may be composed of a plurality of neural network layers. For example, the neural network may include an input layer, a hidden layer, and an output layer. Each of the plurality of neural network layers may include at least one node and at least one weight, and may perform neural network operations through operations between weights and the operation results of the previous layer. At least one weight of the plurality neural network layers may be optimized by the training result of the artificial intelligence model. For example, during the training process, the at least one weight may be updated such that a loss value or cost value obtained from the artificial intelligence model is reduced or minimized. The neural network may infer the desired result from an arbitrary input.

[0033] Training methods of the artificial intelligence model may be classified into supervised learning, in which input data and output data are provided as training data according to the learning method, and the correct answer (output data) corresponding to the problem (input data) is determined, unsupervised learning, in which only the input data is provided without the output data, and the correct answer (output data) corresponding to the problem (input data) is not determined, reinforcement learning, in which a reward is given whenever an action is taken in a current state, and training proceeds to maximize the reward, and the like. Alternatively, the training methods may be distinguished based on the architecture, which is the structure of the learning model.

[0034] According to an embodiment of the inventive concept, the artificial intelligence model may use at least one of various artificial intelligence structures and algorithms such as a convolution neural network (CNN) (e.g., GoogleNet, AlexNet, or VGG Network), a region with convolution neural network (R-CNN), a region proposal network (RPN), a recurrent neural network (RNN), a stacking-based deep neural network (S-DNN), a state-space dynamic neural network (S-SDNN), a deconvolution network, a deep belief network (DBN), a restricted Boltzman machine (RBM), a fully convolutional network, a long short-term memory (LSTM) Network, a classification network, Generative Modeling, eXplainable AI, Continual AI, Representation Learning, AI for Material Design, algorithms for natural language processing (e.g., BERT, SP-BERT, MRC/QA, Text Analysis, Dialog System, GPT-3, and GPT-4), algorithms for vision processing (e.g., Visual Analytics, Visual Understanding, Video Synthesis, and ResNet), algorithms for data intelligence (e.g., Anomaly Detection, Prediction, Time-Series Forecasting, Optimization, Recommendation, and Data Creation), but is not limited thereto. The above-described examples are merely illustrative of artificial intelligence structures and algorithms used in accordance with embodiments of the inventive concept, and do not limit the artificial intelligence structures and algorithms used in accordance with embodiments of the inventive concept.

[0035] Hereinafter, various embodiments of the inventive concept will be described in detail with reference to the accompanying drawings. In describing an embodiment, technical details that are well known in the art to which the inventive concept pertains and are not directly related to the inventive concept will be omitted. This is to avoid obscuring the essence of the inventive concept and to convey it more clearly by omitting unnecessary explanations. For the same reason, some components in the attached drawings are exaggerated, omitted, or shown schematically. Furthermore, the size of each component does not necessarily reflect its actual size. In this specification, the same reference numerals throughout the specification may refer to the same or corresponding components.

[0036] In this specification, the term ‘interaction’ may refer to a non-covalent interaction between a compound and a protein, specifically a non-covalent interaction between elements of the compound and residues of the protein.

[0037] In this specification, the term ‘binding affinity’ may refer to the strength of

the binding interaction between a compound and a protein.

[0038] In this specification, the term ‘knowledge distillation’ may refer to a method by which a teacher model transfers learned knowledge to a student model. In this specification, the teacher model may be a first Artificial intelligence (AI) model 100, and the student model may be a second AI model.

[0039] FIG. 1 is a functional block diagram illustrating an internal configuration of a computing apparatus 1000, according to an embodiment. Referring to FIG. 1, the computing apparatus 1000 may refer to any AI device that receives protein data 101 and compound data 102 to predict the binding affinity and the non-covalent binding of the corresponding protein-compound. The computing apparatus 1000 may include a first AI model 100 and a second AI model 200, and the first AI model 100 and the second AI model 200 may receive the protein data 101 and the compound data 102.

[0040] The first AI model 100 and the second AI model 200 are described as physically separate components from each other. However, this is only an example. In another embodiment, the first AI model 100 and the second AI model 200 may be logically separate structures, in which case they may be implemented by separate functions on a single server.

[0041] The first AI model 100 may be a device learned to predict binding affinity and non-covalent interactions of compound-protein by using protein data and compound data. The first AI model 100 may perform knowledge distillation by delivering an output value to the second AI model 200.

[0042] The second AI model 200 may predict the binding affinity and the non-covalent interaction of compound-protein based on the protein data, the compound data, and data received from the first AI model 100.

[0043] A loss function may be calculated based on a first output value (a long dashed-dotted-dotted line 1) of the first AI model 100 and the first output value (a long dashed-dotted-dotted line 2) of the second AI model 200. Moreover, the non-covalent interaction and the binding affinity may be predicted based on a second output value (a dashed-dotted line 3) of the first AI model 100 and a second output value (a dashed-dotted line 4) of the second AI model 200. The method for predicting the binding affinity and the non-covalent interaction of compound-protein by using the first AI model 100 and the second AI model 200 of the computing apparatus 1000 will be described in detail below.

[0044] FIG. 2 is a functional block diagram showing an internal configuration of an AI model, according to an embodiment.

[0045] According to an embodiment, both the first AI model 100 and the second AI model 200 may include a protein encoding module 110, a compound encoding module 120, an attention module 130, and a prediction module 140. Hereinafter, the descriptions of the protein encoding module 110, the compound encoding module 120, the attention module 130, and the prediction module 140 may be applied to both the first AI model 100 and the second AI model 200.

[0046] The first AI model 100 and the second AI model 200 may receive the protein data 101 and the compound data 102.

[0047] The first AI model 100 may obtain the protein data 101 and the compound data 102 from a three-dimensional (3D) structure of a compound-protein complex, for example, from a PDBbind database.

[0048] The second AI model 200 may obtain the protein data 101 and the compound data 102 from a free compound-protein complex model, for example, from a BindingDB database.

[0049] Here, the protein data 101 may include a ligand of a pocket region, which is a recessed region on the protein surface, and the compound data 102 may include a target molecule region, a region that binds to the protein.

[0050] When the protein data 101 and the compound data 102 are received, the protein encoding module 110 and the compound encoding module 120 may perform encoding to use the protein data 101 and the compound data 102 as an input of the attention module 130. Here, the encoding may refer to a method of converting original data into a different format.

[0051] The protein encoding module 110 and the compound encoding module 120 may respectively generate a protein attribute vector and a compound attribute vector based on the protein data 101 and the compound data 102, and may transmit the protein attribute vector and the compound attribute vector to the attention module 130. In detail, the protein encoding module 110 and the compound encoding module 120 may obtain residue information of a protein pocket and element information of a compound by performing embedding based on the protein data 101 and the compound data 102.

[0052] Here, the “embedding” may refer to converting a sequence (e.g., an amino

acid sequence or an element of a compound) into a vector having a specific numerical value to quantify data.

[0053] When receiving a protein attribute vector and a compound attribute vector, the attention module 130 may calculate an attention value based on the protein attribute vector and the compound attribute vector. Here, the attention value may represent the interaction between the compound and the protein. When receiving the protein attribute vector, the attention module 130 may calculate a protein attention value and transmit the protein attention value to the prediction module 140. When receiving the compound attribute vector, the attention module 130 may calculate a compound attention value and transmit the compound attention value to the prediction module 140.

[0054] When receiving the protein attention value and the compound attention value, the prediction module 140 may generate an interaction matrix based on the protein attention value and the compound attention value. In detail, the prediction module 140 of the first AI model 100 may generate a first interaction matrix, and the prediction module 140 of the second AI model 200 may generate a second interaction matrix. Here, the interaction matrix may be a matrix representing an interaction score between a residue of a protein and an element of a compound.

[0055] Referring to FIGS. 1 and 2, the first AI model 100 may perform learning to predict the binding affinity and the non-covalent interaction of a compound-protein complex by using the first interaction matrix as learning data. The first AI model 100 may receive the compound-protein complex and may transmit the corresponding a binding affinity prediction value and a non-covalent interaction prediction value of the compound-protein complex to the second AI model 200.

[0056] The second AI model 200 may learn the binding affinity and the non-covalent interaction of the compound-protein complex based on the output value of the first AI model and the second interaction matrix.

[0057] In this case, the second AI model 200 may be based on complex free, but the second AI model 200 may accurately predict the binding affinity of compound-protein by receiving knowledge distillation on complex-based data from the first AI model 100.

[0058] The specific details of a compound-protein binding affinity prediction method according to an embodiment will be described in detail in FIGS. 3 and 4 below.

[0059] FIG. 3 is a flowchart of a compound-protein binding affinity prediction method, according to an embodiment. Referring to FIG. 3, the binding affinity prediction method may include an operation of inputting compound data and protein data (S100), an operation of generating a compound attribute vector and a protein attribute vector (S200), an operation of calculating an attention value based on a vector (S300), an operation of generating a first interaction matrix and learning a first AI model (S400), an operation of generating a second interaction matrix and learning a second AI model (S500), and an operation of making a prediction in the second AI model (S600). Hereinafter, operations S100 to S300 may be performed by both the first AI model 100 and the second AI model 200.

[0060] Operation S100 may refer to a step in which the encoding modules 110 and 120 of the AI models 100 and 200 receive compound data and protein data. Here, the compound data and the protein data may be provided as compound-protein complex data in the first AI model 100 and may be provided as compound-protein complex free data in the second AI model 200.

[0061] The received protein data may include amino acid sequences of a residues in a pocket region that bind to a compound. Here, the second AI model 200 may use a protein binding pocket prediction tool to extract the input amino acid sequences associated with a binding pocket of the protein by receiving the compound-protein complex free data. Afterwards, the second AI model 200 may extract residue amino acid embedding of the pocket region by using another pre-learned AI model.

[0062] In an embodiment, an operation of receiving the compound data may include an operation of generating a compound graph. The compound graph may be generated using a known AI graph. Here, the compound structure graph may have atomic attributes as nodes and bond attributes as edges.

[0063] In this case, the compound data may include an elemental attribute and a bond attribute. For example, the element attribute may include an element's type, chirality, formal charge, the number of bonded hydrogen atoms, the number of bonded free electrons, hybridization, aromaticity, cyclicity, or the like. Here, the bond may refer to a bond between elements of a compound. For example, the bond attribute may include the type of bond (a single bond, a double bond, or a triple bond) and the nature of bond (directionality, chirality, stereo, or conjugation).

[0064] Operation S200 may refer to a step for generating a compound attribute

vector and a protein attribute vector in the encoding modules 110 and 120 of the AI models 100 and 200.

[0065] In detail, the protein encoding module 110 may extract the protein attribute vector by using the amino acid embedding of a residue as an input. For example, the protein attribute vector may be extracted by using the amino acid embedding of the residue as an input based on Equation 1 below.

[Equation 1]

$$p_j = SelfAttLayer_{P \to P}\left(x_j, \{x_1, \ldots, x_{L_p}\}\right)$$

[0066] Here, p_j may denote the extracted protein attribute vector, and x_j may denote the amino acid of a residue.

[0067] The compound encoding module 120 may extract a compound attribute vector by using the node and edge of a compound structure graph as inputs. For example, the compound attribute vector may be extracted by using the node and edge of a compound structure graph as inputs based on Equation 2 below.

[Equation 2]

$$h_v^{(l)} = COMBINE(h_v^{(l-1)}, AGGREGATE(\{(h_v^{(l-1)}, h_u^{(l-1)}, e_{uv}) : u \in \mathcal{N}(v)\}))$$

[0068] Here, (v) may denote all neighbors of node v; e_{uv} may denote the edge between nodes u and v; and, $h_v^{(l-1)}$ may denote the $(l-1)$-th layer of node v.

[0069] This layer may be repeatedly applied to update nodes, and the updated nodes may be used as the compound attribute vector.

[0070] Operation S300 may be a step in which the attention module 130 of the AI models 100 and 200 calculates an attention value based on the compound attribute vector and the protein attribute vector.

[0071] In particular, the attention module 130 may calculate each key, each value, and each query based on the compound attribute vector and the protein attribute vector. Here, each key, each value, and each query may be calculated by using a known attention algorithm.

[0072] The attention module 130 may include a cross-attention layer to perform cross-attention. Accordingly, the attention module 130 may cross the calculated compound query with the calculated protein query, or cross the key and value of a compound with the key and value of a protein, and may provide the crossed result to a sub-attention layer.

[0073] The sub-attention layer may perform attention by using a multi-head self-attention layer and may provide an output value to a self-attention layer. The self-attention layer may perform self-attention to provide an output value to a feed-forward layer. The feed-forward layer may perform a feed-forward operation to provide a compound attention value and a protein attention value. Accordingly, when the attention module 130 receives a compound attribute vector, the output value may be the compound attention value. When the attention module 130 receives a protein attribute vector, the output value may be the protein attention value.

[0074] FIG. 4 is a diagram illustrating an operation of calculating an attention value by using a layer, according to an embodiment. Referring to FIG. 4, the attention module 130 may cross a query of a compound attribute vector 'v' with the query of a protein attribute vector 'p', or may cross the key and value of the compound attribute vector 'v' with the key and value of the protein attribute vector 'p'. The attention module 130 may include a sub-attention layer, a self-attention layer, and a feed-forward layer to calculate a compound attention value and a protein attention value by using multi-head attention, self-attention, and feed-forward. The finally calculated compound attention value may be represented as $\bar{v}_i$, and the finally calculated protein attention value may be represented as $\bar{p}_j$.

[0075] Operation S400 may be a step in which the prediction module 140 of the first AI model 100 generates a first interaction matrix and learns a first AI model. Here, the first interaction matrix may represent an interaction score between the element of a compound and the residue of a protein. The interaction score may be calculated based on Equation 3 below.

[Equation 3]

$$M_{ij} = \sigma(\bar{v}_i W_1) \cdot \sigma(\bar{p}_j W_2)^T$$

[0076] Here, M_{ij} represents the interaction score between the i-th element and the j-th residue, and W_1 and W_2 represent learning parameters, respectively.

[0077] The prediction module 140 of the first AI model 100 may extract a latent variable based on the generated interaction score.

[Equation 4]

$$V_{inter} = \sum_{i=1}^{N_a} \sum_{j=1}^{L_p} M_{ij}[\sigma(\bar{v}_i W_3), \sigma(\bar{p}_j W_4)]$$

[0078] Here, V_{Inter} represents the latent variable, and W_3 and W_4 represent learning parameters, respectively.

[0079] The prediction module 140 of the first AI model 100 may provide the latent variable to a fully connected layer to predict a binding affinity.

[0080] Here, a loss function of the first AI model 100 may be expressed based on Equation 5 below.

[Equation 5]

$$\mathcal{L}_{total} = \mathcal{L}_{aff} + \alpha_T \mathcal{L}_{inter}$$

[0081] Here, α_T denotes a weight parameter, and $\mathcal{L}_{aff}$ and $\mathcal{L}_{inter}$ may be expressed by Equations 6 and 7, respectively.

[Equation 6]

$$\mathcal{L}_{aff} = \frac{1}{N} \sum_{n=1}^{N} \left\| P_{gt} - P_{pred} \right\|_n^2$$

[Equation 7]

$$\mathcal{L}_{inter} = \frac{1}{N} \sum_{n=1}^{N} \sum_{i=1}^{N_a} \sum_{j=1}^{L_p} -\left\| B_{ij} log M_{ij} + (1 - B_{ij}) \log (1 - M_{ij}) \right\|_n$$

[0082] Here, P_{gt} may denote an actual binding affinity; P_{pred} may denote a predicted binding affinity; and B_{ij} may denote a binary label between an actual i-th element and a j-th residue.

[0083] The first AI model 100 may deliver the output value of the first AI model to the second AI model 200. Here, the output value of the first AI model may include the predicted binding affinity, the attribute vector of a compound, the attribute vector of a protein, and a first interaction matrix.

[0084] Operation S500 may be a step in which the prediction module 140 of the second AI model 200 generates a second interaction matrix and learns a second AI model. In detail, operation S500 may refer to a step of inputting the output value of

the first AI model into the second AI model to perform knowledge distillation, and may be a step in which the prediction module 140 of the second AI model 200 generates the second interaction matrix and learns the second AI model based on the output value of the first AI model. Here, the output value of the first AI model may include the predicted binding affinity, the attribute vector of a compound, the attribute vector of a protein, and a first interaction matrix.

[0085] The prediction module 140 of the second AI model 200 may learn the second AI model by generating the second interaction matrix by using the same procedure as operations S100 to S400, except that it receives compound-protein complex free data.

[0086] Operation S600 may refer to a step of predicting a non-covalent binding interaction and a binding affinity from the learned second AI model 200. In an embodiment, operation S600 may include an operation of comparing the first interaction matrix and the second interaction matrix to derive a loss function.

[0087] In particular, the second AI model 200 may calculate two loss functions through a two-stage optimization process. The first loss function may be expressed by Equations 8 and 9 below.

[Equation 8]

$$\mathcal{L}_{stage_1} = \mathcal{L}_{inter} + \mathcal{L}_{hint}$$

[Equation 9]

$$\mathcal{L}_{inter} = \frac{1}{N}\sum_{n=1}^{N}\sum_{i=1}^{N_a}\sum_{j=1}^{L_p} -\left\|\widehat{M}_{ij}^{T} log M_{ij}^{S} + \left(1-\widehat{M}_{ij}^{T}\right)\log\left(1-M_{ij}^{S}\right)\right\|_n$$

$$\mathcal{L}_{hint} = 0.5\left(\frac{1}{N}\sum_{n=1}^{N}\Phi_n\left\|\psi_T^c(I;W_{hint}^c)-\psi_S^c\left(I;W_{guide}^c\right)\right\|_n^2 + \frac{1}{N}\sum_{n=1}^{N}\Phi_n\left\|\psi_T^p\left(I;W_{hint}^p\right)-\psi_S^p\left(I;W_{guide}^p\right)\right\|_n^2\right)$$

[0088] Here, M_{ij}^{S} may denote the interaction between the i-th element and the j-th residue predicted by the second AI model 200; $\widehat{M}_{ij}^{T}$ may denote the interaction between the i-th element and the j-th residue predicted by the first AI model 100;

W_{hint} and W_{guide} may denote a parameter of a layer for calculating an attention value based on a compound attribute vector, and a parameter of a layer for calculating an attention value based on a protein attribute vector, respectively; ψ_T and ψ_S may denote deep neural functions of the first AI model 100 and the second AI model 200, respectively; and, Φ_n may denote a parameter that quantizes the confidence for the prediction of the first AI model 100.

[0089] The second loss function calculated from the second AI model 200 may be expressed based on Equation 10 below.

[Equation 10]

$$\mathcal{L}_{stage_2} = \mathcal{L}_{reg} + \alpha_S \mathcal{L}_{imit}$$

$$\mathcal{L}_{reg} = \frac{1}{N}\sum_{n=1}^{N} \left\| P_S - P_{gt} \right\|_n^2$$

$$\mathcal{L}_{imit} = \frac{1}{N}\sum_{n=1}^{N} \Phi_n \| P_S - P_T \|_n^2$$

[0090] Here, α_S may denote a weight parameter controlling the final predicted affinity, and P_S, P_T, and P_{gt} may denote the prediction of the second AI model 200, the prediction of the first AI model 100, and an actual label, respectively.

[0091] FIG. 5 is a graph for comparing the performance of models predicting a binding affinity of compound-protein, according to an embodiment. In FIG. 5, Blendnet(s) represents the second AI model 200 according to an embodiment of the inventive concept. Referring to FIG. 5, compared to other prediction models, the prediction method according to an embodiment of the inventive concept demonstrates superior prediction performance in all of new protein-based segmentation, new compound-based segmentation, and random segmentation model evaluation.

[0092] FIG. 6 is a block diagram showing a hardware configuration of a computing apparatus, according to an embodiment.

[0093] The computing apparatus 1000 may include a memory 1100, a processor 1200, a communication module 1300, and an input/output interface 1400. As shown

in FIG. 6, the computing apparatus 1000 may be configured to exchange information and/or data over a network by using the communication module 1300.

[0094] The memory 1100 may include any computer-readable recording medium. According to an embodiment, the memory 1100 may include a permanent mass storage device such as a random access memory (RAM), a read only memory (ROM), a disk drive, a solid state drive (SSD), a flash memory, or the like. For another example, the permanent mass storage device such as a ROM, a SSD, a flash memory, or a disk drive may be included in the computing apparatus 1000 as a permanent storage device separate from the memory. Moreover, the memory 1100 may store the first AI model 100 and the second AI model 200, and may store an operating system and at least one program code.

[0095] These software components may be loaded from a computer-readable recording medium independent of the memory 1100. Such the separate computer-readable recording medium may include a recording medium capable of being directly connected to the computing apparatus 1000, and may include, for example, a computer-readable recording medium such as a floppy drive, a disk, a tape, a DVD/CD-ROM drive, and a memory card. For another example, the software components may be loaded into the memory 1100 through the communication module 1300, not the computer-readable recording medium. For example, at least one program may be loaded into the memory 1100 based on a computer program installed by files provided by developers or a file distribution system, which distributes a file for installing an application, through the communication module 1300.

[0096] The processor 1200 may be configured to process instructions of a computer program by performing basic arithmetic, logic, and input and output operations. The instructions may be provided to another user terminal (not shown) or another external system by the memory 1100 or the communication module 1300.

[0097] The communication module 1300 may provide a configuration or function that allows a user terminal (not shown) and the computing apparatus 1000 to communicate with each other over the network. The computing apparatus 1000 may provide a configuration or function for communicating with an external system (e.g., a separate cloud system, etc.). For example, control signals, commands, data, or the like provided under the control of the processor 1200 of the computing apparatus

1000 may be transmitted to a user terminal and/or the external system through the communication module of the user terminal and/or the external system via the communication module 1300 and a network.

[0098] Moreover, the input/output interface 1400 of the computing apparatus 1000 may be a means for interfacing with an apparatus (not shown) for an input or an output, which is connected to the computing apparatus 1000 or is included in the computing apparatus 1000. In FIG. 6, the input/output interface 1400 is shown as an element configured separately from the processor 1200, but is not limited thereto. For example, the input/output interface 1400 may be configured to be included in the processor 1200. The computing apparatus 1000 may include more components than those of FIG. 6. However, there is no need to clearly illustrate most conventional components.

[0099] The processor 1200 of the computing apparatus 1000 may be configured to manage, process, and/or store information and/or data received from a plurality of user terminals and/or a plurality of external systems.

[00100] The above-described method and/or various embodiments may be implemented by digital electronic circuits, computer hardware, firmware, software, and/or a combination thereof. Various embodiments of the inventive concept may be implemented as a data processing apparatus, for example, one or more programmable processors and/or one or more computing apparatuses, or as a computer-readable recording medium and/or a computer program stored on the computer-readable recording medium. The computer program described above may be written in any programming language, including a compiled or interpreted language, and may be distributed in any form, such as a standalone program, module, subroutine, or the like. The computer program may be distributed through a single computing apparatus, a plurality of computing apparatuses connected through the same network, and/or a plurality of computing apparatuses distributed to be connected through a plurality of different networks.

[00101] Meanwhile, embodiments disclosed in the specification may be implemented in a form of a recording medium storing instructions executable by a computer. The instructions may be stored in a form of program codes, and, when executed by a processor, generate a program module to perform operations of the disclosed embodiments. The recording medium may be implemented as a computer-

readable recording medium. The computer-readable recording medium includes all kinds of recording media in which instructions capable of being decoded by a computer are stored. For example, there may be a ROM, a RAM, a magnetic tape, a magnetic disk, a flash memory, an optical data storage device, or the like.

[00102] The above description refers to detailed embodiments for implementing the inventive concept. The inventive concept may include embodiments in which a design is changed simply or which are easily changed, as well as the embodiments described above. In addition, the inventive concept may include technologies that are easily changed and implemented by using the above-described embodiments. While the inventive concept has been described with reference to embodiments thereof, it will be apparent to those of ordinary skill in the art that various changes and modifications may be made thereto without departing from the spirit and scope of the inventive concept as set forth in the following claims

[00103] According to an embodiment of the inventive concept, compound-protein binding affinity may be accurately and effectively predicted based on compound-protein complex free.

[00104] Effects according to the inventive concept are not limited to the effects mentioned above, and other effects not mentioned will be clearly understood by those skilled in the art from the following description.

[00105] While the inventive concept has been described with reference to exemplary embodiments, it will be apparent to those skilled in the art that various changes and modifications may be made without departing from the spirit and scope of the inventive concept. Therefore, it should be understood that the above embodiments are not limiting, but illustrative.

WHAT IS CLAIMED IS:

1. A compound-protein binding affinity prediction method performed by at least one processor, the method comprising:

receiving compound data and protein data, which interact with each other;

generating an attribute vector of a compound and an attribute vector of a protein based on the input compound data and the input protein data;

calculating an attention value based on the attribute vector of the compound and the attribute vector of the protein;

generating a first interaction matrix based on the attention value;

learning a first AI model to predict a binding affinity and a non-covalent interaction of compound-protein by using the first interaction matrix as learning data; and

predicting the binding affinity and the non-covalent interaction of the compound-protein based on an output value of the first AI model.

2. The method of claim 1, wherein the receiving of the compound data includes:

generating a compound structure graph, and

wherein the compound structure graph has an attribute of an atom as a node and has an attribute of a bond as an edge.

3. The method of claim 1, wherein the calculating of the attention value based on the attribute vector of the compound and the attribute vector of the protein includes:

calculating a key, a value, and a query based on the attribute vector of the compound and the attribute vector of the protein; and

crossing the calculated query of the compound and the calculated query of the protein, or crossing a key and a value of the compound and a key and a value of the protein to provide the crossed result to a sub-attention layer.

4. The method of claim 3, wherein the calculating of the attention value based on the attribute vector of the compound and the attribute vector of the protein further includes:

providing an output value of the sub-attention layer to a self-attention layer; and

providing an output value of the self-attention layer to a feed-forward layer.

5. The method of claim 1, wherein the learning of the first AI model includes:

calculating an interaction score between one or more elements of the compound and one or more residues of the protein;

extracting a latent variable from the score; and

providing the latent variable to a fully connected layer.

6. The method of claim 1, wherein the output value of the first AI model includes the attribute vector of the compound, the attribute vector of the protein, the first interaction matrix, and the binding affinity predicted by the first AI model.

7. The method of claim 1, wherein the predicting of the binding affinity and the non-covalent interaction of the compound-protein based on the output value of the first AI model includes:

performing knowledge distillation by inputting the output value of the first AI model into a second AI model; and

predicting the non-covalent interaction and the binding affinity in the second AI model, and

wherein data received by the first AI model is based on a compound-protein complex.

8. The method of claim 7, wherein the performing of the knowledge distillation includes:

calculating a loss function by comparing the first interaction matrix with a second interaction matrix generated by the second AI model.

9. A non-transitory computer readable recording medium including computer program to perform the compound-protein binding affinity prediction of claim 1.

10. A computing apparatus comprising:

a communication module;

a memory; and

at least one processor connected to the memory and configured to execute at least one computer-readable program included in the memory,

wherein the at least one program includes instructions for:

receiving a structure of a compound and a structure of a protein, which interact with each other;

generating an attribute vector of a compound and an attribute vector of a protein based on the input structure of the compound and the input structure of the protein;

calculating an attention value based on the attribute vector of the compound and the attribute vector of the protein;

generating a first interaction matrix based on the attention value;

learning a first AI model to predict a binding affinity and a non-covalent interaction of compound-protein by using the first interaction matrix as learning data; and

predicting the binding affinity and the non-covalent interaction of the compound-protein based on an output value of the first AI model.

ABSTRACT

A compound-protein binding affinity prediction method performed by at least one processor includes receiving compound data and protein data, which interact with each other, generating an attribute vector of a compound and an attribute vector of a protein based on the input compound data and the input protein data, calculating an attention value based on the attribute vector of the compound and the attribute vector of the protein, generating a first interaction matrix based on the attention value, learning a first AI model to predict a binding affinity and a non-covalent interaction of compound-protein by using the first interaction matrix as learning data, and predicting the binding affinity and the non-covalent interaction of the compound-protein based on an output value of the first AI model.

FIG. 1

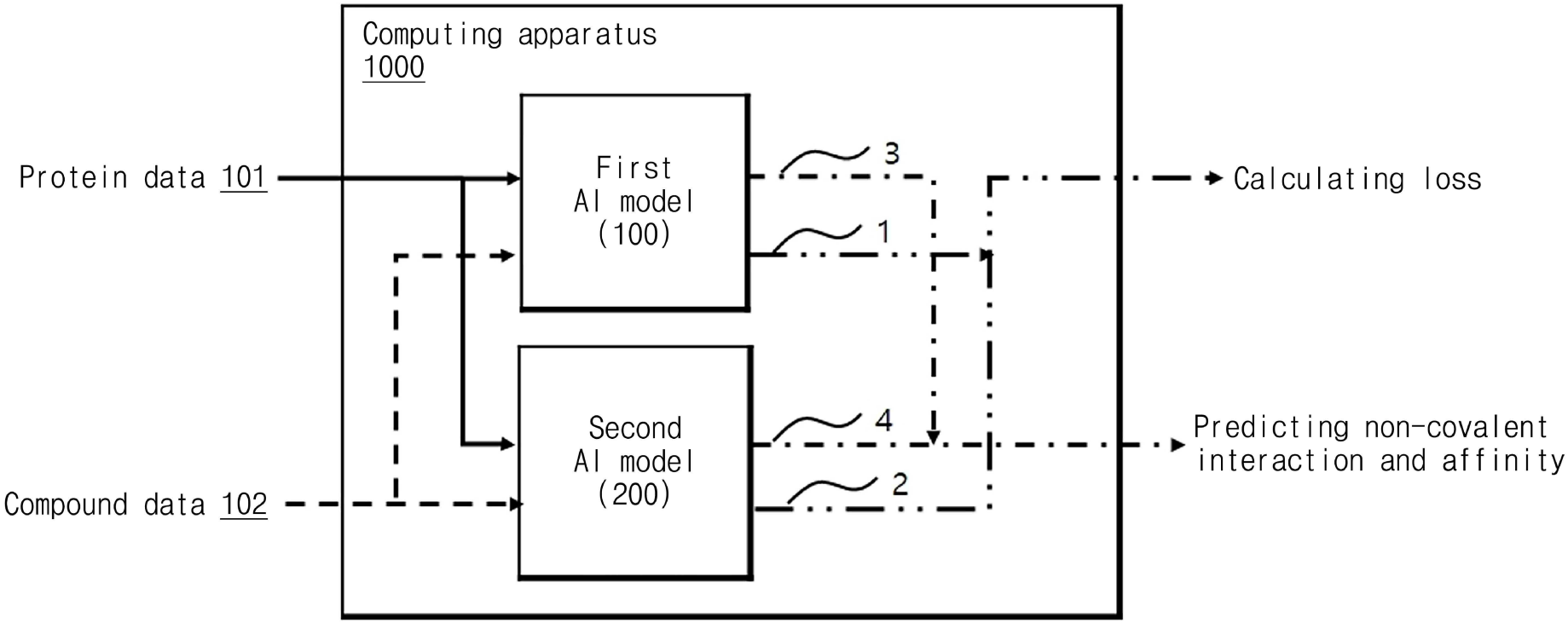
Computing apparatus
1000
Protein data 101
Compound data 102
First
AI model
(100)
Second
AI model
(200)
3
1
4
2
Calculating loss
Predicting non-covalent
interaction and affinity

FIG. 2

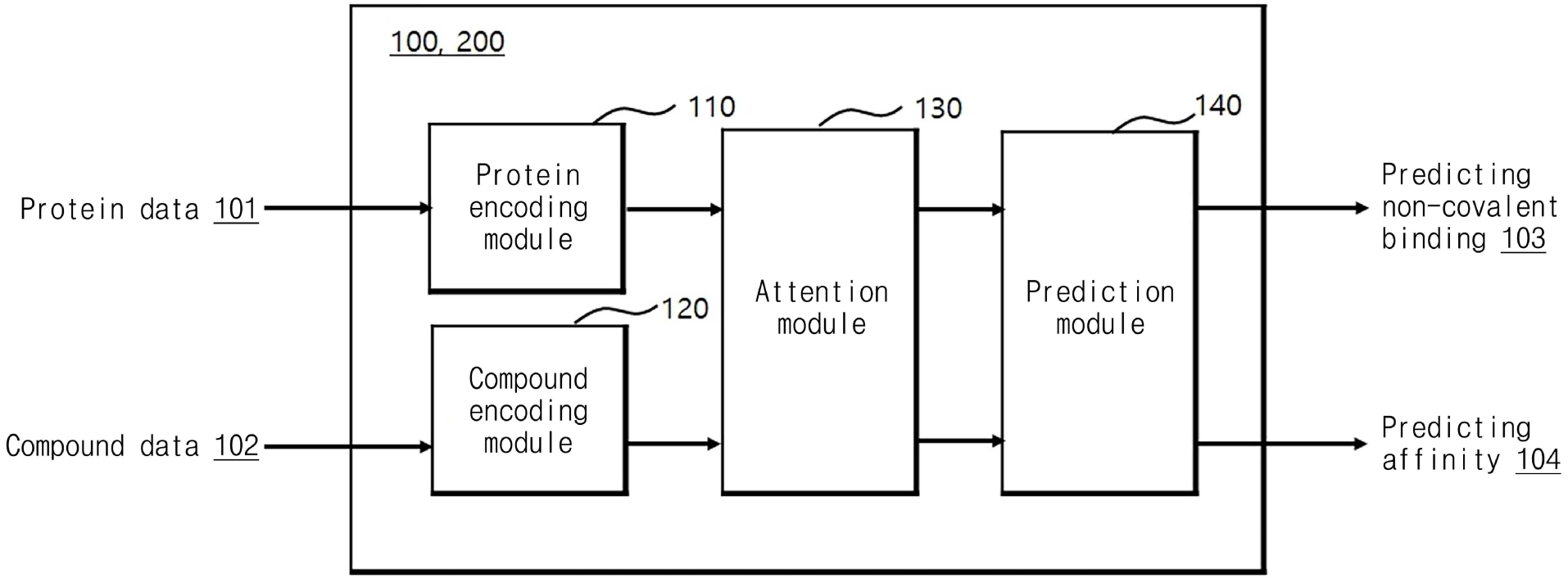
100, 200
110
130
140
Protein encoding module
Attention module
Prediction module
120
Compound encoding module
Protein data 101
Compound data 102
Predicting non-covalent binding 103
Predicting affinity 104

FIG. 3

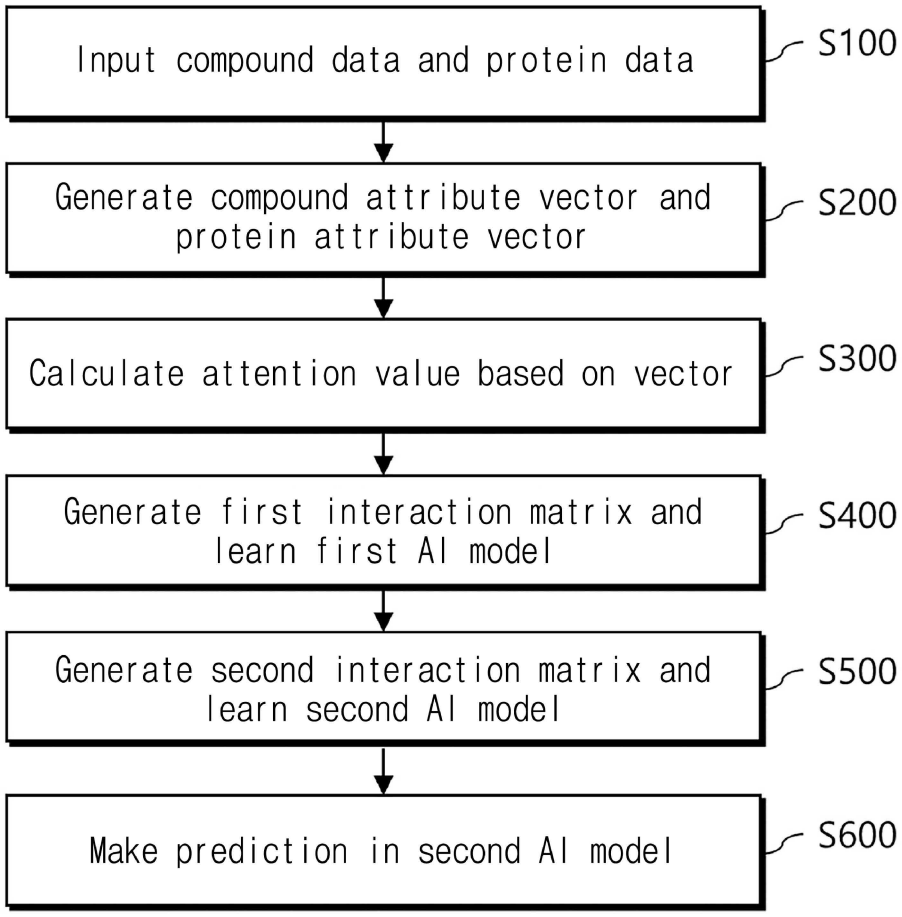
Input compound data and protein data
S100
Generate compound attribute vector and protein attribute vector
S200
Calculate attention value based on vector
S300
Generate first interaction matrix and learn first AI model
S400
Generate second interaction matrix and learn second AI model
S500
Make prediction in second AI model
S600

FIG. 4

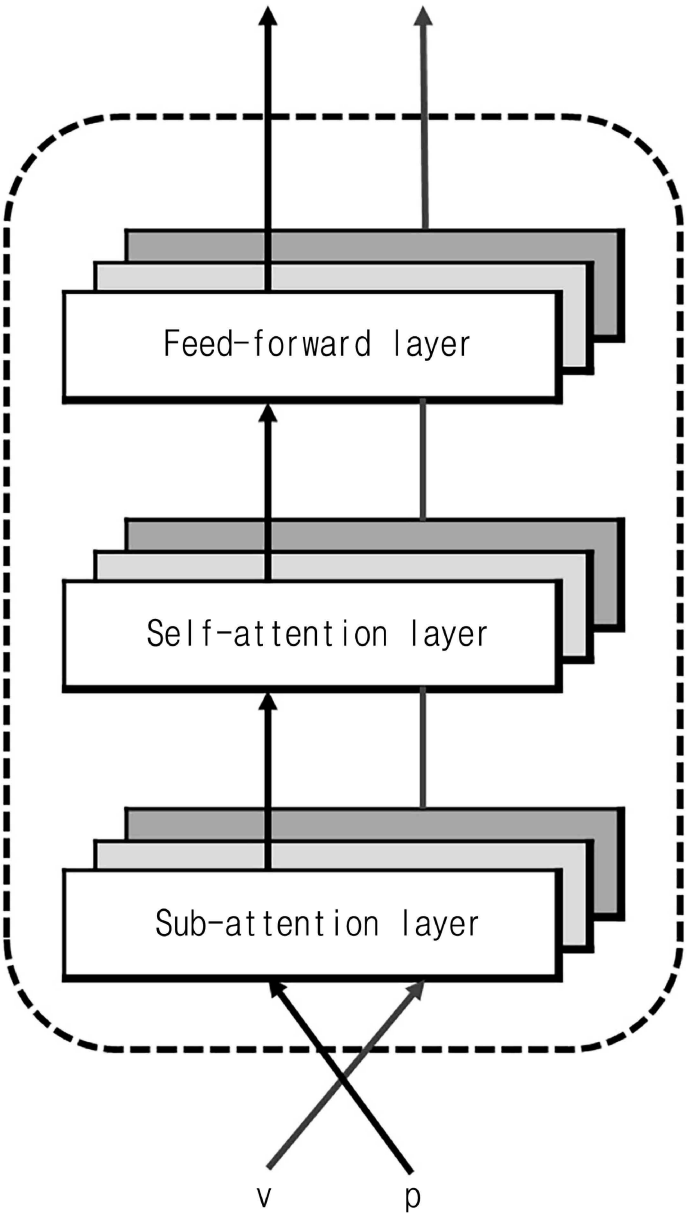
Feed-forward layer
Self-attention layer
Sub-attention layer
v
p

FIG. 5

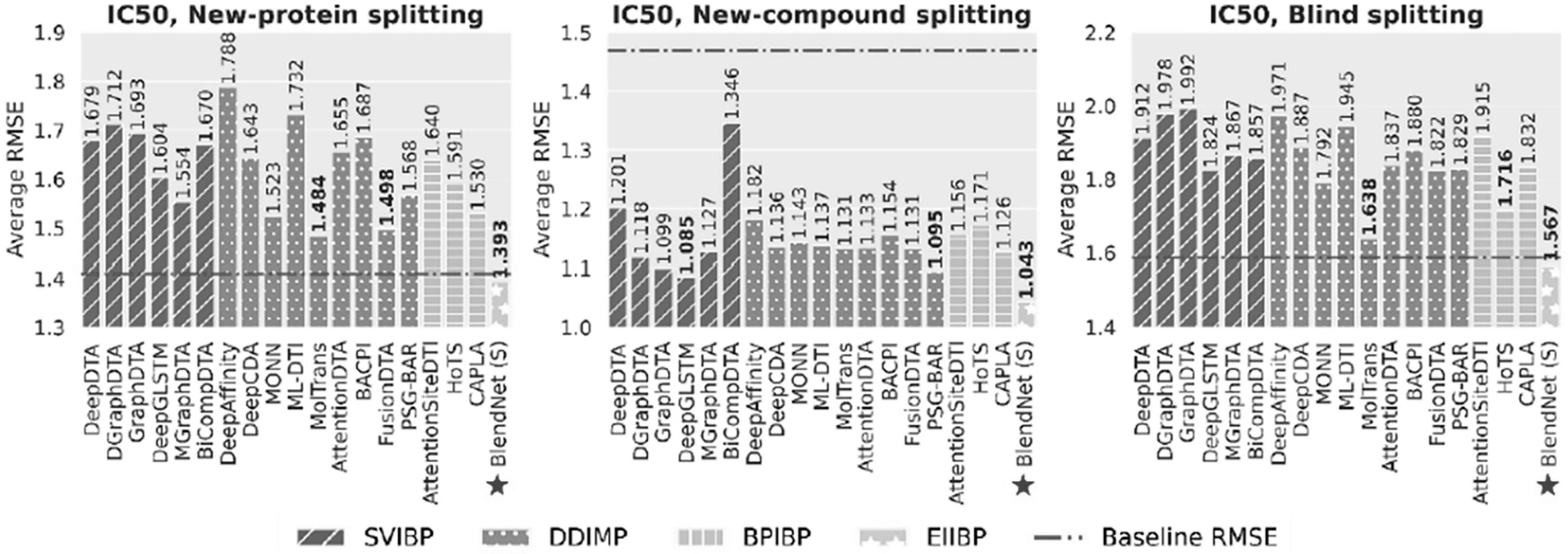
IC50, New-protein splitting
IC50, New-compound splitting
IC50, Blind splitting
Average RMSE
DeepDTA
DGraphDTA
GraphDTA
DeepGLSTM
MGraphDTA
BiCompDTA
DeepAffinity
DeepCDA
MONN
ML-DTI
MolTrans
AttentionDTA
BACPI
FusionDTA
PSG-BAR
AttentionSiteDTI
HoTS
CAPLA
★ BlendNet (S)
1.679
1.712
1.693
1.604
1.554
1.670
1.788
1.643
1.523
1.732
1.484
1.655
1.687
1.498
1.568
1.640
1.591
1.530
1.393
1.201
1.118
1.099
1.085
1.127
1.346
1.182
1.136
1.143
1.137
1.131
1.133
1.154
1.131
1.095
1.156
1.171
1.126
1.043
1.912
1.978
1.992
1.824
1.867
1.857
1.971
1.887
1.792
1.945
1.638
1.837
1.880
1.822
1.829
1.915
1.716
1.832
1.567
SVIBP
DDIMP
BPIBP
EIIBP
Baseline RMSE

FIG. 6

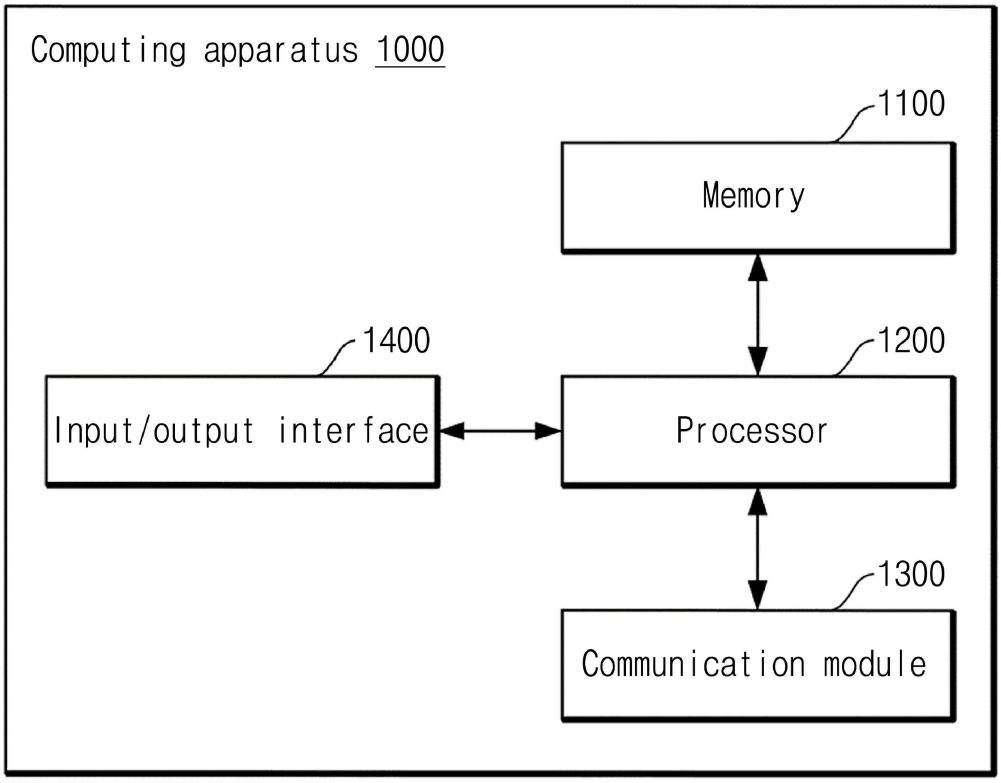
Computing apparatus 1000
1100
Memory
1400
1200
Input/output interface
Processor
1300
Communication module

Doc Code: ECOMM.AUTH/ECOMM.WTDW
Doc Description: Internet Communications Authorization/Internet Communications Authorization Withdrawal

PTO/SB/439 (11-15)

AUTHORIZATION FOR INTERNET COMMUNICATIONS IN A PATENT APPLICATION OR REQUEST TO WITHDRAW AUTHORIZATION FOR INTERNET COMMUNICATIONS		
	Application No.	
	Filing Date	
	First Named Inventor	SANGHYUN PARK
	Art Unit	
	Examiner Name	
	Practitioner Docket No.	PP6807284

To: Commissioner for Patents
P.O. Box 1450
Alexandria, VA 22313-1450

I. To authorize permission for Internet Communications.

☒ Recognizing that Internet communications are not secure, I hereby authorize the USPTO to communicate with the undersigned and practitioners in accordance with 37 CFR 1.33 and 37 CFR 1.34 concerning any subject matter of this application via video conferencing, instant messaging, or electronic mail. I understand that a copy of these communications will be made of record in the application file. (MPEP 502.03)

II. To withdraw authorization for Internet Communications.

☐ The authorization given on _____, to the USPTO to communicate with the undersigned and any practitioner in accordance with 37 CFR 1.33 and 37 CFR 1.34 concerning any subject matter of this application via Internet communications such as video conferencing, instant messaging, or electronic mail is hereby withdrawn. I understand that the withdrawal is effective when approved rather than when received.

I am the

☐ applicant.

☐ attorney or agent of record. Registration number _____.

☒ attorney or agent acting under 37 CFR 1.34. Registration number 80134.

/Byungwoong Park/ — Signature

2025-12-06 — Date

Byungwoong Park — Typed or printed name

301-246-0134 — Telephone Number

NOTE: This form must be signed in accordance with 37 CFR 1.33. See 37 CFR 1.4 for signature requirements and certifications. Juristic entities must be represented by a patent practitioner (see 37 CFR 1.31, which is applicable to any paper filed on or after September 16, 2012, that is presented on behalf of a juristic entity, regardless of application filing date). Submit multiple forms if more than one signature is required, see below*.

☐ * Total of _____ forms are submitted.

Privacy Act Statement

The **Privacy Act of 1974 (P.L. 93-579)** requires that you be given certain information in connection with your submission of the attached form related to a patent application or patent. Accordingly, pursuant to the requirements of the Act, please be advised that: (1) the general authority for the collection of this information is 35 U.S.C. 2(b)(2); (2) furnishing of the information solicited is voluntary; and (3) the principal purpose for which the information is used by the U.S. Patent and Trademark Office is to process and/or examine your submission related to a patent application or patent. If you do not furnish the requested information, the U.S. Patent and Trademark Office may not be able to process and/or examine your submission, which may result in termination of proceedings or abandonment of the application or expiration of the patent.

The information provided by you in this form will be subject to the following routine uses:

1. The information on this form will be treated confidentially to the extent allowed under the Freedom of Information Act (5 U.S.C. 552) and the Privacy Act (5 U.S.C 552a). Records from this system of records may be disclosed to the Department of Justice to determine whether disclosure of these records is required by the Freedom of Information Act.
2. A record from this system of records may be disclosed, as a routine use, in the course of presenting evidence to a court, magistrate, or administrative tribunal, including disclosures to opposing counsel in the course of settlement negotiations.
3. A record in this system of records may be disclosed, as a routine use, to a Member of Congress submitting a request involving an individual, to whom the record pertains, when the individual has requested assistance from the Member with respect to the subject matter of the record.
4. A record in this system of records may be disclosed, as a routine use, to a contractor of the Agency having need for the information in order to perform a contract. Recipients of information shall be required to comply with the requirements of the Privacy Act of 1974, as amended, pursuant to 5 U.S.C. 552a(m).
5. A record related to an International Application filed under the Patent Cooperation Treaty in this system of records may be disclosed, as a routine use, to the International Bureau of the World Intellectual Property Organization, pursuant to the Patent Cooperation Treaty.
6. A record in this system of records may be disclosed, as a routine use, to another federal agency for purposes of National Security review (35 U.S.C. 181) and for review pursuant to the Atomic Energy Act (42 U.S.C. 218(c)).
7. A record from this system of records may be disclosed, as a routine use, to the Administrator, General Services, or his/her designee, during an inspection of records conducted by GSA as part of that agency's responsibility to recommend improvements in records management practices and programs, under authority of 44 U.S.C. 2904 and 2906. Such disclosure shall be made in accordance with the GSA regulations governing inspection of records for this purpose, and any other relevant (*i.e.*, GSA or Commerce) directive. Such disclosure shall not be used to make determinations about individuals.
8. A record from this system of records may be disclosed, as a routine use, to the public after either publication of the application pursuant to 35 U.S.C. 122(b) or issuance of a patent pursuant to 35 U.S.C. 151. Further, a record may be disclosed, subject to the limitations of 37 CFR 1.14, as a routine use, to the public if the record was filed in an application which became abandoned or in which the proceedings were terminated and which application is referenced by either a published application, an application open to public inspection or an issued patent.
9. A record from this system of records may be disclosed, as a routine use, to a Federal, State, or local law enforcement agency, if the USPTO becomes aware of a violation or potential violation of law or regulation.

Doc Code: PD.REQ.RETR
Document Description: Request for USPTO to retrieve priority docs

PTO/SB/38 (08-22)
Approved for use through 05/31/2024. OMB 0651-0031
U.S. Patent and Trademark Office; U.S. DEPARTMENT OF COMMERCE

Under the Paperwork Reduction Act of 1995, no persons are required to respond to a collection of information unless it displays a valid OMB control number.

Request to Retrieve Electronic Priority Application(s)

Send completed form to: Commissioner for Patents
P.O. Box 1450, Alexandria, VA 22313-1450

COMPLETE IF KNOWN	
Application Number	
Filing Date	
First Named Inventor	SANGHYUN PARK
Art Unit	
Examiner Name	
Attorney Docket Number	PP6807284

Pursuant to 37 CFR 1.55(i), the undersigned hereby requests that the USPTO retrieve an electronic copy of each of the following foreign applications for which priority has been claimed under 35 U.S.C. 119(a)-(d) from a foreign intellectual property office participating with the USPTO in a bilateral or multilateral priority document exchange agreement. This Request must be submitted:

- within the later of sixteen months from the filing date of the prior foreign application or four months from the actual filing date of an application under 35 U.S.C. 111(a),
- within four months from the later of the date of commencement (37 CFR 1.491(a)) or the date of the initial submission under 35 U.S.C. 371 of an application entering the national stage under 35 U.S.C. 371, or
- with a petition under 37 CFR 1.55(e) or (f).

☐ **OPTION A**

Please retrieve the priority application identified in Column C, a certified copy of which is contained in the EP or JP application identified in Columns A and B:

	A	B			C	
	Code for Participating Office (EP or JP only)	Application containing the non-participating priority application			Non-participating priority application to be retrieved	
		App. No.	Filing Date	Access Code	Country Code	App. No.
1						

☑ **OPTION B**

This Request may be used for the infrequent circumstance when a claim for priority to an application filed in a participating foreign intellectual property office was made prior to that foreign intellectual property office becoming a participating foreign intellectual property office.

Please retrieve the priority application identified in Columns A and B:

	A	B		
	Code for Participating Office (e.g., EP) or WIPO DAS Depositing Office (e.g., AU, BR, CN, DK, EA, EE, ES, FI, GB, IB, IN, JP, KR, MA, NL, NZ, SE)	Application to be retrieved		
		App. No.	Filing Date	Access Code (for WIPO DAS Depositing Office)
1	KR	10-2024-0180165	2024-12-06	50E4
2				

The USPTO will not attempt to retrieve the identified priority application(s) unless an identical claim for foreign priority to the application identified above is made pursuant to 37 CFR 1.55(d) or a petition is granted under 37 CFR 1.55(e) or (f). Applicants are advised to consult Private PAIR (accessed through www.uspto.gov) to assure that the retrieval has been successful. The applicant bears the ultimate responsibility for ensuring that a copy of the foreign application is received by the Office from the participating foreign intellectual property office, or a certified copy of the foreign priority application is filed, within the time period set forth in 37 CFR 1.55(g)(1).

I hereby declare that I have the authority to grant access to the above-identified foreign application(s).

/Byungwoong Park/	2025-12-06
Signature	Date
Byungwoong Park	301-246-0134
Printed or Typed Name	Telephone Number
Attorney of Record	80,134
Title	Registration Number, if applicable

This collection of information is required by 37 CFR 1.55(d). The information is required to obtain or retain a benefit by the public which is to file (and by the USPTO to process) an application. Confidentiality is governed by 35 U.S.C. 122 and 37 CFR 1.11 and 1.14. This collection is estimated to take 8 minutes to complete, including gathering, preparing, and submitting the completed application form to the USPTO. Time will vary depending upon the individual case. Any comments on the amount of time you require to complete this form and/or suggestions for reducing this burden, should be sent to the Chief Information Officer, U.S. Patent and Trademark Office, U.S. Department of Commerce, P.O. Box 1450, Alexandria, VA 22313-1450. DO NOT SEND FEES OR COMPLETED FORMS TO THIS ADDRESS. **SEND TO: Commissioner for Patents, P.O. Box 1450, Alexandria, VA 22313-1450.**

If you need assistance in completing the form, call 1-800-PTO-9199 and select option 2.

Privacy Act Statement

The Privacy Act of 1974 (P.L. 93-579) requires that you be given certain information in connection with your submission of the attached form related to a patent application or patent. Accordingly, pursuant to the requirements of the Act, please be advised that: (1) the general authority for the collection of this information is 35 U.S.C. 2(b)(2); (2) furnishing of the information solicited is voluntary; and (3) the principal purpose for which the information is used by the U.S. Patent and Trademark Office is to process and/or examine your submission related to a patent application or patent. If you do not furnish the requested information, the U.S. Patent and Trademark Office may not be able to process and/or examine your submission, which may result in termination of proceedings or abandonment of the application or expiration of the patent.

The information provided by you in this form will be subject to the following routine uses:

1. The information on this form will be treated confidentially to the extent allowed under the Freedom of Information Act (5 U.S.C. 552) and the Privacy Act (5 U.S.C. 552a). Records from this system of records may be disclosed to the Department of Justice to determine whether the Freedom of Information Act requires disclosure of these records.
2. A record from this system of records may be disclosed, as a routine use, in the course of presenting evidence to a court, magistrate, or administrative tribunal, including disclosures to opposing counsel in the course of settlement negotiations.
3. A record in this system of records may be disclosed, as a routine use, to a Member of Congress submitting a request involving an individual, to whom the record pertains, when the individual has requested assistance from the Member with respect to the subject matter of the record.
4. A record in this system of records may be disclosed, as a routine use, to a contractor of the Agency having need for the information in order to perform a contract. Recipients of information shall be required to comply with the requirements of the Privacy Act of 1974, as amended, pursuant to 5 U.S.C. 552a(m).
5. A record related to an International Application filed under the Patent Cooperation Treaty in this system of records may be disclosed, as a routine use, to the International Bureau of the World Intellectual Property Organization, pursuant to the Patent Cooperation Treaty.
6. A record in this system of records may be disclosed, as a routine use, to another federal agency for purposes of National Security review (35 U.S.C. 181) and for review pursuant to the Atomic Energy Act (42 U.S.C. 218(c)).
7. A record from this system of records may be disclosed, as a routine use, to the Administrator, General Services, or his/her designee, during an inspection of records conducted by GSA as part of that agency's responsibility to recommend improvements in records management practices and programs, under authority of 44 U.S.C. 2904 and 2906. Such disclosure shall be made in accordance with the GSA regulations governing inspection of records for this purpose, and any other relevant (i.e., GSA or Commerce) directive. Such disclosure shall not be used to make determinations about individuals.
8. A record from this system of records may be disclosed, as a routine use, to the public after either publication of the application pursuant to 35 U.S.C. 122(b) or issuance of a patent pursuant to 35 U.S.C. 151. Further, a record may be disclosed, subject to the limitations of 37 CFR 1.14, as a routine use, to the public if the record was filed in an application which became abandoned or in which the proceedings were terminated and which application is referenced by either a published application, an application open to public inspections or an issued patent.
9. A record from this system of records may be disclosed, as a routine use, to a Federal, State, or local law enforcement agency, if the USPTO becomes aware of a violation or potential violation of law or regulation.

Doc code: IDS
Doc description: Information Disclosure Statement (IDS) Filed

PTO/SB/08a (02-18)
Approved for use through 11/30/2020. OMB 0651-0031
U.S. Patent and Trademark Office; U.S. DEPARTMENT OF COMMERCE
Under the Paperwork Reduction Act of 1995, no persons are required to respond to a collection of information unless it contains a valid OMB control number.

INFORMATION DISCLOSURE STATEMENT BY APPLICANT (**Not for submission under 37 CFR 1.99**)		
	* 4422. 000. , 22 / 04	
	, 02 0 - $. 00	
	, 0420, . 200 *. 00. 004	- *, . * 24, 4* - .
	* 404 . 00	
	, 3. 2 004, . 20	
	* 0004 00 $02/ 00 , 22 / 04	444$23/ $0

U.S.PATENTS						
, 3. 2 004 *. 000 20	- 000 , 0	4. 00. 0, 22 / 04	. 00 - 0000	*2220 $. 00	, . 20 004. 00. 0004 * 4422. . 0 0020000 $0222 0. 0	4. - 024- 0222 . 24+0 02 / 1040 - 0200. . 04 . 22. - 02 04 - 0200. . 0 , 0- 2402 * 440. 4
	0					
*0002 / 021 00 . 00 . 00000. . 240- 04 . 00. 020. 00. 0042 . 00. 420. 20 222/ 010 * 00 / 2000. 0						
U.S.PATENT APPLICATION PUBLICATIONS						
, 3. 2 004 *. 000 20	- 000 , 0	42/ 22. 000. , 22 / 04	. 00 - 0000	42/ 22. 000. $. 00	, . 20 004. 00. 0004 * 4422. . 0 0020000 $0222 0. 0	4. - 024- 0222 . 24+0 02 / 1040 - 0200. . 04 . 22. - 02 04 - 0200. . 0 , 0- 2402 * 440. 4
	0					
*0002 / 021 00 . 00 . 00000. . 240- 04 2/ 22100 * 4422. 000. 20000. 0 0042 . 00. 420. 20 222/ 010 * 00 / 2000. 0						
FOREIGN PATENT DOCUMENTS						
, 3. 2 004 *. 000 20	- 000 , 0	, 0400. $0222 0. 0 , 22 / 040	- 02. 040 - 000/ 0	. 00 - 0000	42/ 22. 000. $. 00	, . 20 004. 00. 0004 * 4422. . 0002000 $0222 0. 0	4. - 024- 0222 . 24+0 02 / 1040 - 0200. . 0 4. 22. - 02 04 - 0200. . 0 , 0- 2402 * 440. 4	- 0
	0	022/ 2/ 0222/ 0020	. -	*	/ 2/ 022/ 2/ 4	- 0022, . 00. . 24 . 0004200 - 0 $- , 02. 0. 00. 00. 20		☒
	/	022/ 2/ 0222$/ 340	. -	*	/ 2/ 0224200	$, * - . , , *, - 0		☒
*0002 / 021 00 . 00 . 00000. . 2, 0400. 4. 00. 0$0222 0. 020 000. 0 0042 . 00. 420. 20 222/ 010 * 00 / 2000.						
NON-PATENT LITERATURE DOCUMENTS						

INFORMATION DISCLOSURE STATEMENT BY APPLICANT þ**Not for submission under 37 CFR 1.99)**	A˚˚™11t1z¸u1z8˚	
	¸™z1¸1t8	
	¸˚Št¸11 8¸1zv8zt1˚	cA¸ | ÜV1¸¸A¸1
	A˚t1zt	
	è∂11 z8˚¸11 8	
	Att1˚z81¸11×8t¸u1z8˚	¸¸¸¸m¿z¸¸

è∂11 z8˚ 1z t 1™Š	4 t8 ¸1	1z1™u¸8 z11 8 1¸t¸8 1ut¸1˚ þz 4 A¸ 1í A¸¸ èí í è¸ ct¹ t t™8 1¸t¸8 1˚t 1™8 þw¸8z 1˚˚˚1˚˚1t8t¹ t t™8 1¸t¸8 t81 þz 11×¹ 1 111z z8¹˚1u˚z 1™Š8˚ 1™Š11˚1Šu1¹ 11t1™1¹ 8t1t¹¸1t8¹˚ 118ŠþŠt¹ v1™u1 8úŠŠu8 zu1 z8˚þŠt¹ ˚uz™Š¸8˚¹ 1t1 1z¸/1˚ 11uzt˚1w¸8˚8˚uz™Š¸8¸.	í ¥
	1	c1z11 z c81 8t 1™"˘ z¸z1 1¸¸z t1˚˚8¸ 1t 1z¸1˚˚˚1t8 z–##%% &" ' #%# ! &# % %% %'%"'#&" " %%%'#&" %%&% &" # '%# &#%! #%# #'%#%'#&" &#; ! "-"" -! 8!	☐
		%% % # %%& % %#, ## # #&## %'%% &'%"'#%#&% &" ' &! " -' #&'%# &" ' #%# &'# '! #%-%%%" & %#& # ##! %#& #%% # % ! &# %##% # %#; ! 3!	☐
%% &! $ #&%'& % % ##&" %# &" -' %% ' ##%#%! #% & ! " %" ' #%#&" # %&# %#&" ' #%%&% ## '%%# %! ' '&"			

EXAMINER SIGNATURE

##% # %#%#% %! #%		# %%#&" &# %#%	

*MÇAœlč MR: Initial if reference consiÁereÁÁwÁetÁer or not citation is in conformance witÁ œPMP 6Á9. I raw line tÁrougÁ a citation if not in conformance anÁ not consiÁereÁ. IncluÁe copy of tÁis form witÁ ne#t communication to applicant.

[1] See KinÁ CoÁes of ˘ SPMđ Patent I ocuments at www.˘ SPMđ.- đ V or œPMP 9Á1.Á4. [2] Mnter office tÁat issueÁ tÁe ÁocumentÁ by tÁe two-letter coÁe (WIPđ StanÁarÁ SM3). [3] Öor Japanese patent ÁocumentsÁtÁe inÁication of tÁe year of tÁe reign of tÁe Mmperor must preceÁe tÁe serial number of tÁe patent Áocument. [4] KinÁ of Áocument by tÁe appropriate symbols as inÁicateÁ on tÁe Áocument unÁer WIPđ StanÁarÁ SM16 if possible. [5] Applicant is to place a cÁeck mark Áere if MnglisÁ language translation is attacÁeÁ.

INFORMATION DISCLOSURE STATEMENT BY APPLICANT (Not for submission under 37 CFR 1.99)		
	Application number	
	Filing Date	
	First named Inventor	Sang-Yun PARK
	Art Unit	
	Examiner name	
	Attorney Docket Number	PP68727284

CERTIFICATION STATEMENT

Please see 37 CFR 1.97 and 1.98 to make the appropriate selection(s):

☐ That each item of information contained in the information disclosure statement was first cited in any communication from a foreign patent office in a counterpart foreign application not more than three months prior to the filing of the information disclosure statement. See 37 CFR 1.97(e)(1).

OR

☐ That no item of information contained in the information disclosure statement was cited in a communication from a foreign patent office in a counterpart foreign application, and not known to the knowledge of the person signing the certification after making reasonable inquiry, no item of information contained in the information disclosure statement was known to any individual designated in 37 CFR 1.56(c) more than three months prior to the filing of the information disclosure statement. See 37 CFR 1.97(e)(2).

☐ See attached certification statement.

☐ The fee set forth in 37 CFR 1.17 (p) has been submitted herewith.

☒ A certification statement is not submitted herewith.

SIGNATURE

A signature of the applicant or representative is required in accordance with CFR 1.33, 10.18. Please see CFR 1.4(d) for the form of the signature.

Signature	/Byungwoong Park/	Date (YYYY-mm-dd)	2025-12-26
Name/Print	Byungwoong Park	Registration Number	84134

This collection of information is required by 37 CFR 1.97 and 1.98. The information is required to obtain or retain a benefit by the public which is to file (and by the USPTO to process) an application. Confidentiality is governed by 35 U.S.C. 122 and 37 CFR 1.14. This collection is estimated to take 1 hour to complete, including gathering, preparing and submitting the completed application form to the USPTO. Time will vary depending upon the individual case. Any comments on the amount of time you require to complete this form and/or suggestions for reducing this burden should be sent to the Chief Information Officer, U.S. Patent and Trademark Office, U.S. Department of Commerce, P.O. Box 1450, Alexandria, VA 22313-1450. DO NOT SEND FEES OR COMPLETED FORMS TO THIS ADDRESS. **SEND TO: Commissioner for Patents, P.O. Box 1450, Alexandria, VA 22313-1450.**

Privacy Act Statement

MÁe Privacy Act of 1974 (P.h. 93-579) requires tÁat you be given certain information in connection witÁ your submission of tÁe attacÁeÁ form relateÁ to a patent application or patent. AccorÁinglyÁpursuant to tÁe requirements of tÁe ActÁplease be aÁviseÁ tÁat: (1) tÁe general autÁority for tÁe collection of tÁis information is 35 ˘ .S.C. 2(b)(2); (2) furnisÁing of tÁe information soliciteÁ is voluntary; anÁ (3) tÁe principal purpose for wÁicÁ tÁe information is useÁ by tÁe ˘ .S. Patent anÁ MraÁemark ðffice is to process anÁ/or e#amine your submission relateÁ to a patent application or patent. If you Áo not furnisÁ tÁe requesteÁ informationÁtÁe ˘ .S. Patent anÁ MraÁemark ðffice may not be able to process anÁ/or e#amine your submissionÁwÁicÁ may result in termination of proceeÁings or abanÁonment of tÁe application or e#piration of tÁe patent.

MÁe information proviÁeÁ by you in tÁis form will be subject to tÁe following routine uses:

1. MÁe information on tÁis form will be treateÁ confiÁentially to tÁe e#tent alloweÁ unÁer tÁe ÖreeÁom of Information Act (5 ˘ .S.C. 552) anÁ tÁe Privacy Act (5 ˘ .S.C. 552a). RecorÁs from tÁis system of recorÁs may be ÁiscloseÁ to tÁe I epartment of Justice to Áetermine wÁetÁer tÁe ÖreeÁom of Information Act requires Áisclosure of tÁese recorÁ s.

2. A recorÁ from tÁis system of recorÁs may be ÁiscloseÁÁas a routine useÁin tÁe course of presenting eviÁence to a courtÁmagistrateÁor aÁministrative tribunalÁincluÁing Áisclosures to opposing counsel in tÁe course of settlement negotiations.

3. A recorÁ in tÁis system of recorÁs may be ÁiscloseÁÁas a routine useÁto a œember of Congress submitting a request involving an inÁiviÁualÁto wÁom tÁe recorÁ pertainsÁwÁen tÁe inÁiviÁual Áas requesteÁ assistance from tÁe œember witÁ respect to tÁe subject matter of tÁe recorÁ.

4. A recorÁ in tÁis system of recorÁs may be ÁiscloseÁÁas a routine useÁto a contractor of tÁe Agency Áaving neeÁ for tÁe information in orÁer to perform a contract. Recipients of information sÁall be requireÁ to comply witÁ tÁe requirements of tÁe Privacy Act of 1974Áas amenÁeÁÁpursuant to 5 ˘ .S.C. 552a(m).

5. A recorÁ relateÁ to an International Application fileÁ unÁer tÁe Patent Cooperation Mreaty in tÁis system of recorÁs may be ÁiscloseÁÁas a routine useÁto tÁe International Bureau of tÁe WorlÁ Intellectual Property ðrganizationÁpursuant to tÁe Patent Cooperation Mreaty.

6. A recorÁ in tÁis system of recorÁs may be ÁiscloseÁÁas a routine useÁto anotÁer feÁeral agency for purposes of č ational Security review (35 ˘ .S.C. 181) anÁ for review pursuant to tÁe Atomic Mnergy Act (42 ˘ .S.C. 218(c)).

7. A recorÁ from tÁis system of recorÁs may be ÁiscloseÁÁas a routine useÁto tÁe AÁministratorÁ- eneral ServicesÁor Áis/Áer ÁesigneeÁÁuring an inspection of recorÁs conÁucteÁ by - SA as part of tÁat agency's responsibility to recommenÁ improvements in recorÁs management practices anÁ programsÁunÁer autÁority of 44 ˘ .S.C. 29Á4 anÁ 29Á6. SucÁ Áisclosure sÁall be maÁe in accorÁance witÁ tÁe - SA regulations governing inspection of recorÁs for tÁis purposeÁanÁ any otÁer relevant (i.e.Á- SA or Commerce) Áirective. SucÁ Áisclosure sÁall not be useÁ to make Áeterminations about inÁiviÁuals.

8. A recorÁ from tÁis system of recorÁs may be ÁiscloseÁÁas a routine useÁto tÁe public after eitÁer publication of tÁe application pursuant to 35 ˘ .S.C. 122(b) or issuance of a patent pursuant to 35 ˘ .S.C. 151. ÖurtÁerÁa recorÁ may be ÁiscloseÁÁsubject to tÁe limitations of 37 CÖR 1.14Áas a routine useÁto tÁe public if tÁe recorÁ was fileÁ in an application wÁicÁ became abanÁoneÁ or in wÁicÁ tÁe proceeÁings were terminateÁ anÁ wÁicÁ application is referenceÁ by eitÁer a publisÁeÁ applicationÁan application open to public inspections or an issueÁ patent.

9. A recorÁ from tÁis system of recorÁs may be ÁiscloseÁÁas a routine useÁto a ÖeÁeralÁStateÁor local law enforcement agencyÁif tÁe ˘ SPMð becomes aware of a violation or potential violation of law or regulation.

COMBINED DECLARATION (37 CFR §1.63) FOR UTILITY PATENT APPLICATION AND ASSIGNMENT FORM[1]

The undersigned acknowledges that this document is being used both as an assignment of the invention and as the declaration (37 CFR 1.63) for a Utility or Design Application.

WHEREAS, the undersigned, hereinafter referred to collectively as Assignor, has invented:

Title: METHOD FOR PREDICITING COMPOUND-PROTEIN BINDING AFFINITY AND APPARATUS THEREOF

for which Assignor is about to make or has made United States or International application for patent.

WHEREAS, as a below named inventor(s), I/(we) hereby declare that:

Section I. Declaration

This declaration is directed to:

☒ The attached U.S. non-provisional patent application, or

☐ U.S. non-provisional patent application number _____, filed on _____, or

☐ PCT international patent application number _____, filed on _____.

The above-identified application was made or authorized to be made by me (us).

I (we) believe that I am (we are) the original inventor (original joint inventors) of a claimed invention in the above-identified application.

I (we) hereby acknowledge that any willful false statement made in this declaration is punishable under 18 U.S.C. 1001 by fine or imprisonment of not more than five (5) years, or both.

I hereby state that I have reviewed and understood the contents of the above identified application, including the claims.

[1] This form requires the use of an Application Data Sheet.

I acknowledge that I am aware of the duty to disclose information which is material to patentability as defined in 37 CFR § 1.56.

Section II. Assignment

In consideration of the sum of One Dollar ($1.00) and other good and valuable consideration paid to each of the undersigned, the undersigned hereby sell(s) and assign(s) to

UIF (University Industry Foundation), Yonsei University

having an address at 50 Yonsei-ro, Seodaemun-gu, Seoul, 03722, Republic of Korea (hereinafter designated as the Assignee), the entire (100%) right, title and interest for the United States as defined in 35 USC §100, in the invention described in the application identified in Section I of this document.

Assignor hereby confirms any prior assignment to Assignee, and to the extent that Assignor has not already done so, agrees to assign, and hereby does, sell, assign and transfer unto Assignee and its successors in interest, the full and exclusive right, title and interest in the United States of America and throughout the world, including the right to claim priority under the laws of the United States, the Paris Convention, and any foreign countries, to the inventions as described in the aforesaid application, to the aforesaid application itself, and all divisions, continuations, continuations-in-part, or other applications claiming priority directly or indirectly from the aforesaid application, and any United States or foreign Letters Patent, utility model, or other similar rights which may be granted thereon, including reissues, reexaminations and extensions thereof, and all copyright rights throughout the world in the aforesaid application and the subject matter disclosed therein, these rights, title and interest to be held and enjoyed by Assignee to the full end of the term for which the Letters Patent, utility model, or other similar rights, are granted and any extensions thereof as fully and entirely as the same would have been held by Assignor had this assignment and sale not been made, and the right to sue for, and recover for past infringements of, or liabilities for, any of the rights relating to any of the applications, patents, utility models, or other similar rights, resulting therefrom, and the copyright rights;

Assignor hereby covenants and agrees to execute all instruments or documents required or requested for the making and prosecution of any applications of any type for patent, utility model, or other similar rights, and for copyright, in the United States and in all foreign countries including, but not limited to, any provisional, continuation, continuation-in-part, divisional, renewal or substitute thereof, and as to letters patent any reissue, re-examination, or extension thereof, and for litigation regarding, or for the purpose of protecting title and to the said invention, the United States application for patent, or Letters Patent therefor, and to testify in support thereof, for the benefit of Assignee without further or other compensation than that above set forth;

Assignor hereby covenants that no assignment, sale, license, agreement or encumbrance has been or will be entered into which would conflict with this Assignment; and

Assignor hereby requests the United States Patent and Trademark Office to issue the Letters Patent of the United States of America to Assignee, and requests that any official of any country or countries foreign to the United States, whose duty it is to issue or grant patents and applications as aforesaid, to issue the Letters Patent, Utility Model Registration or other similar right to Assignee.

The undersigned hereby grant(s) the law firm of **ZION IP Law PLLC** the power to insert on this Declaration and Assignment any further identification which may be necessary or desirable in order to comply with the rules of the U.S. Patent and Trademark Office for recordation of this document.

Section III. Inventor(s)/Assignor(s) Signature(s)

LEGAL NAME OF INVENTOR/ASSIGNOR	Family Name	First Given Name	Second Given Name
	PARK	SANGHYUN	
SIGNATURE		DATE	25.12.3

LEGAL NAME OF INVENTOR/ASSIGNOR	Family Name	First Given Name	Second Given Name
	SEO	SANGMIN	
SIGNATURE	Sangmin Seo	DATE	25/12.3

LEGAL NAME OF INVENTOR/ASSIGNOR	Family Name	First Given Name	Second Given Name
	CHOI	SEUNGYEON	
SIGNATURE	Seungyeon Choi	DATE	25.12.3

LEGAL NAME OF INVENTOR/ASSIGNOR	Family Name	First Given Name	Second Given Name
	KIM	HWANHEE	
SIGNATURE Kim Hwanhee		DATE 25.12.03	

LEGAL NAME OF INVENTOR/ASSIGNOR	Family Name	First Given Name	Second Given Name
	LEE	JIEUN	
SIGNATURE Lee Jieun		DATE 25.12.03	